ACCELERATE® TOOLING COLLECTION

Table of Contents

Split Saddle Tooling 3

Blankload Crossbar Tooling 4

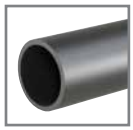
Tool Booms 6

Crossbar Saddles 7

Flange Mount 9

Wrist Clamp 9

T-Clamps 9

Ball Clamps 11

Cross Clamps 13

Parallel Clamps 15

Apple Core Mounts 16

Ball Extensions 16

Table of Contents

Tri-Axis Adaptor Mounts 18

Transfer Press Adaptors 19

Transfer Press Bayonets 22

One-Touch Finger Tools 22

Double T-Clamp 23

Lower Tooling 24

Lower Nest Tooling 25

Gripper Mounts 27

Gripper Sensor Mounts 29

Shovels 30

Proximity Switch Mounts 31

CROSS BAR TOOLING - SGM SERIES

Accelerate® Tooling Collection | Configuration Types

SGM - Split Saddle Tooling 25mm/1 inch Crossbar Tooling

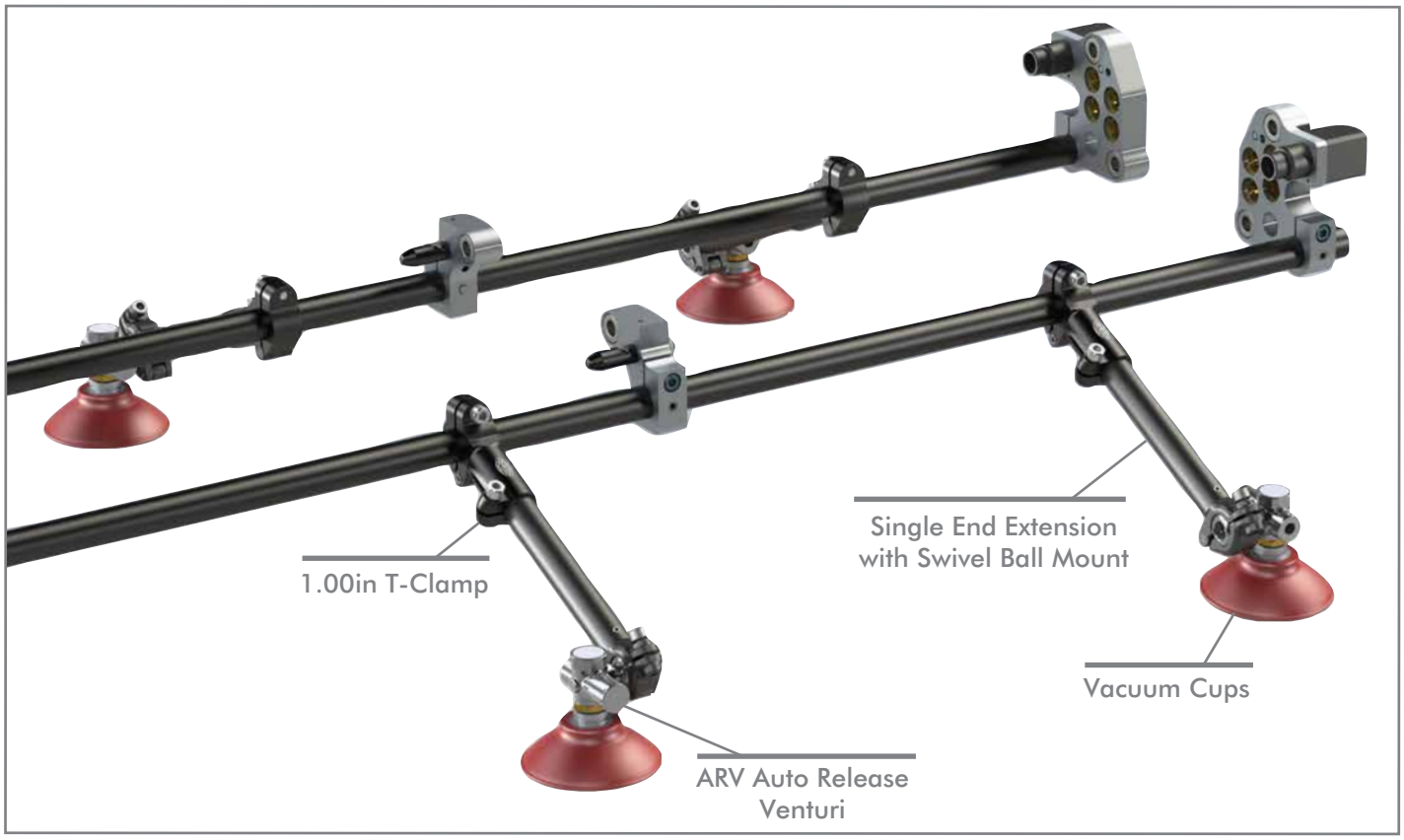

Model Number	Description	Tube Diameter	Tube Length
CPI-SGM-10-1260M-L	Left Assembly No Key	1.00 in	1260mm
CPI-SGM-10-1260M-LF	Left Front Assembly with Key		
CPI-SGM-10-1260M-LR	Left Rear Assembly with Key		
CPI-SGM-10-1260M-R	Right Assembly No Key		
CPI-SGM-10-1260M-RF	Right Front Assembly with Key		
CPI-SGM-10-1260M-RR	Right Rear Assembly with Key		
CPI-SGM-25M-1450M-L	Left Assembly No Key	25mm	1450mm
CPI-SGM-25M-1450M-LF	Left Front Assembly with Key		
CPI-SGM-25M-1450M-LR	Left Rear Assembly with Key		
CPI-SGM-25M-1450M-R	Right Assembly No Key		
CPI-SGM-25M-1450M-RF	Right Front Assembly with Key		
CPI-SGM-25M-1450M-RR	Right Rear Assembly with Key		
CPI-SGM-25M-1800M-L	Left Assembly No Key	25mm	1800mm
CPI-SGM-25M-1800M-LF	Left Front Assembly with Key		
CPI-SGM-25M-1800M-LR	Left Rear Assembly with Key		
CPI-SGM-25M-1800M-R	Right Assembly No Key		
CPI-SGM-25M-1800M-RF	Right Front Assembly with Key		
CPI-SGM-25M-1800M-RR	Right Rear Assembly with Key		

Dimensions and technical information are subject to change without notice

CROSS BAR TOOLING - SGM SERIES

Accelerate® Tooling Collection | Configuration Types

SGM - Split Saddle Tooling 30mm Interpress Crossbar Tooling

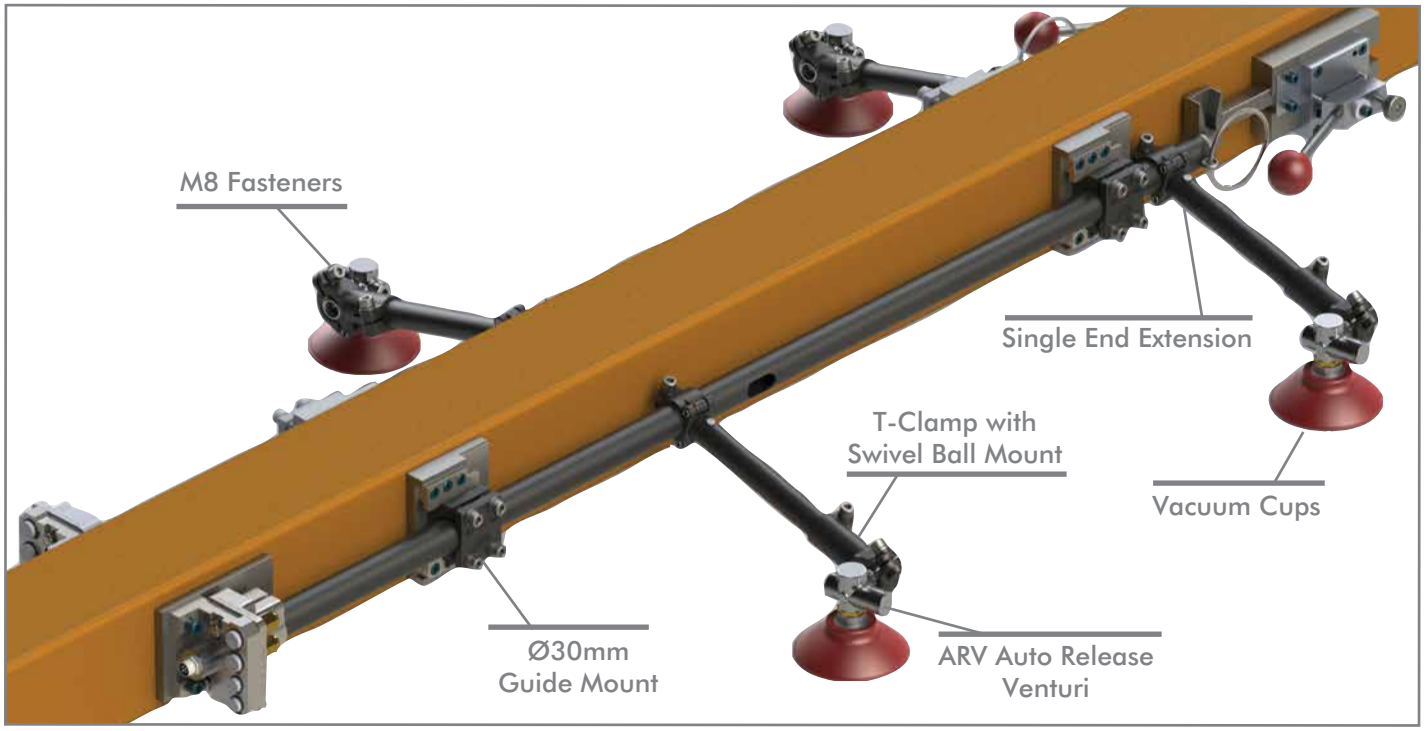

Model Number	Description
CPI-SGM-ASSY-FLC	Interpress Tool, Front Left Side, No Electric
CPI-SGM-ASSY-FRC	Interpress Tool, Front Right Side, No Electric
CPI-SGM-ASSY-RLC	Interpress Tool, Rear Left Side, No Electric
CPI-SGM-ASSY-RRC	Interpress Tool, Rear Right Side, No Electric
CPI-SGM-ASSY-FLC-EL	Interpress Tool, Front Left Side, w/Electric Connector Installed
CPI-SGM-ASSY-FRC-EL	Interpress Tool, Front Right Side, w/Electric Connector Installed
CPI-SGM-ASSY-RLC-EL	Interpress Tool, Rear Left Side, w/Electric Connector Installed
CPI-SGM-ASSY-RRC-EL	Interpress Tool, Rear Right Side, w/Electric Connector Installed

SGM Blankload Crossbar Tooling

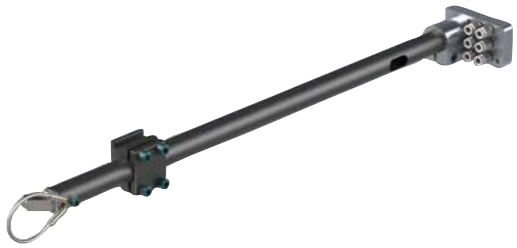

Model Number	Description
CPI-SGM-ASSY-BT-FL	Blankload Tool, Front Left Side, No Electric
CPI-SGM-ASSY-BT-FR	Blankload Tool, Front Right Side, No Electric
CPI-SGM-ASSY-BT-RL	Blankload Tool, Rear Left Side, No Electric
CPI-SGM-ASSY-BT-RR	Blankload Tool, Rear Right Side, No Electric
CPI-SGM-ASSY-BT-FL-EL	Blankload Tool, Front Left Side, w/Electric Connector Installed
CPI-SGM-ASSY-BT-FR-EL	Blankload Tool, Front Right Side, w/Electric Connector Installed
CPI-SGM-ASSY-BT-RL-EL	Blankload Tool, Rear Left Side, w/Electric Connector Installed
CPI-SGM-ASSY-BT-RR-EL	Blankload Tool, Rear Right Side, w/Electric Connector Installed

CROSS BAR SADDLE TOOLING

Accelerate® Tooling Collection | Configuration Types

SGM Cross Bar Saddle Tooling 40mm (PXL/PL and PGB/PGA Press Tooling)

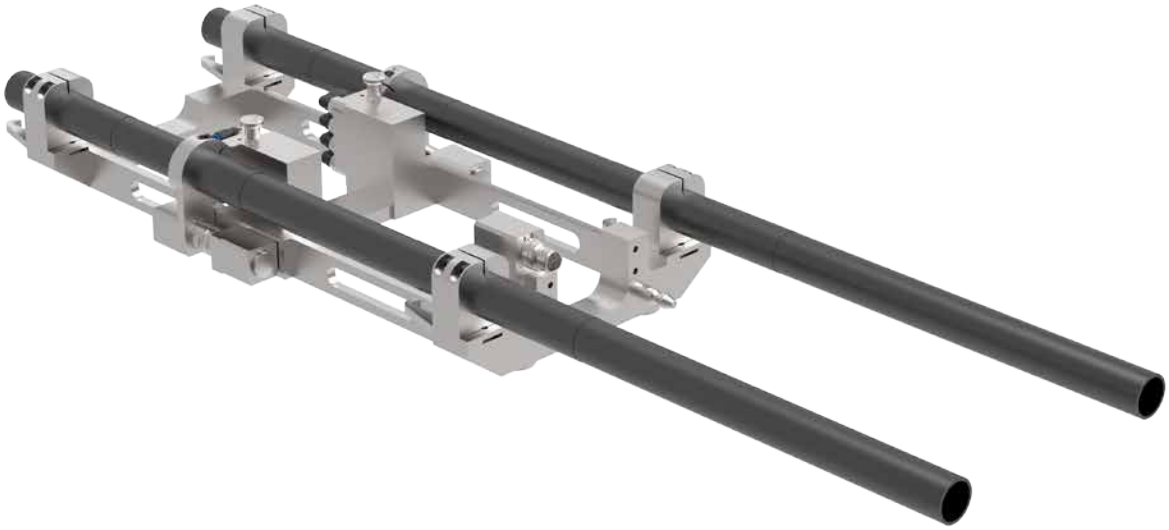

Model Number	Description
CPI-SGM-40-1200-RF-EL	Crossbar ASSY, SGM, 40mm Tube x 1200mm Length, Right Front, with Electric
CPI-SGM-40-1200-RR-EL	Crossbar ASSY, SGM, 40mm Tube x 1200mm Length, Right Rear, with Electric
CPI-SGM-40-1200-LF-EL	Crossbar ASSY, SGM, 40mm Tube x 1200mm Length, Left Front, with Electric
CPI-SGM-40-1200-LR-EL	Crossbar ASSY, SGM, 40mm Tube x 1200mm Length, Left Rear, with Electric

LWT Saddle Crossbar Tool Example

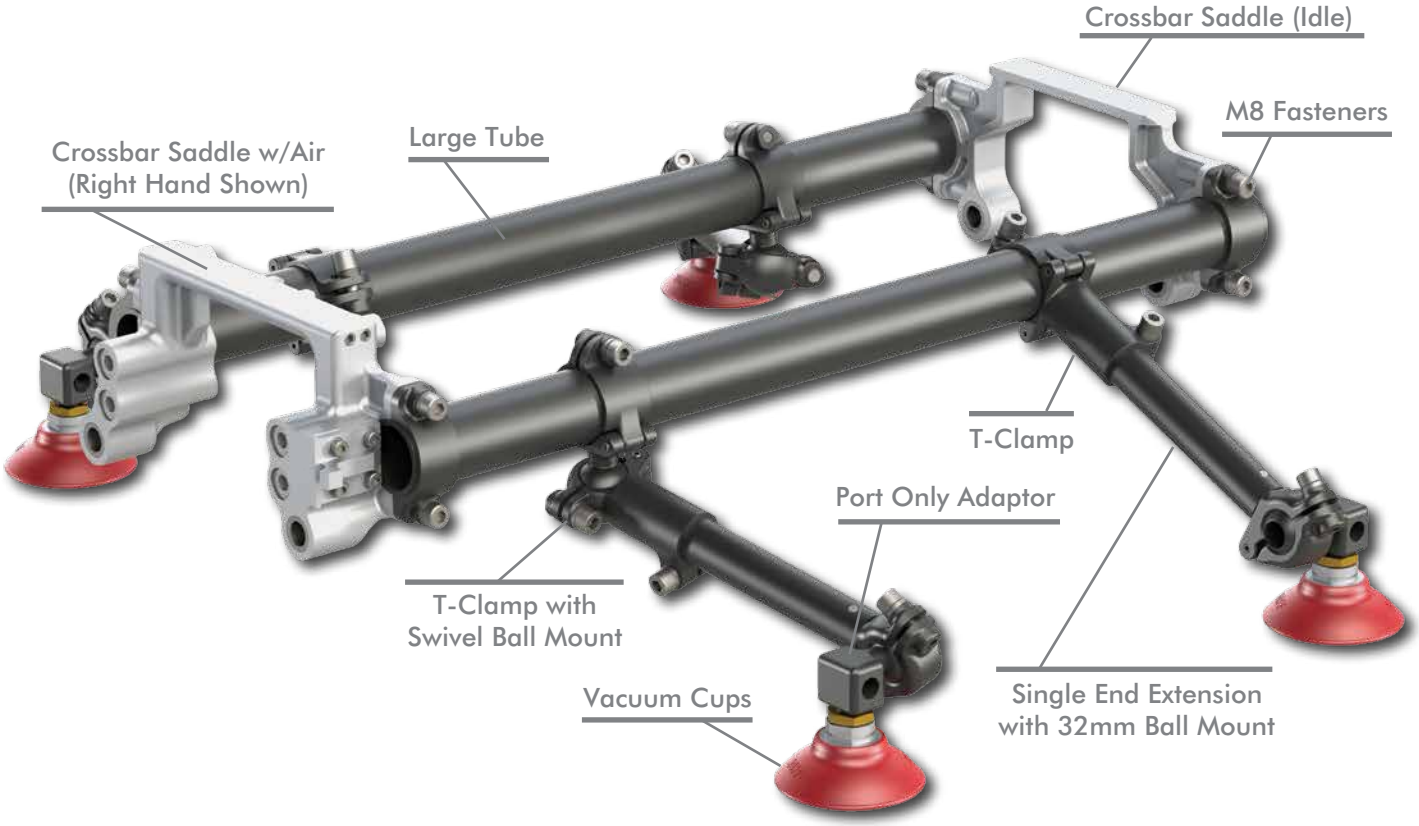

Dimensions and technical information are subject to change without notice

LIGHTWEIGHT TUBING

Accelerate® Tooling Collection | Boom/Tubing Sizes

Model Number	(Ø)	Tolerance (mm)	Weight
LWT-40-1000	40mm	±0.14	987g/m [0.66 lb/ft]
LWT-15E-1000	1.50 in	±0.14	907g/m [0.61 lb/ft]
LWT-30-1000	30mm	+0.08/-0.14	715g/m [0.48 lb/ft]
LWT-10E-1000	1.00 in	+0.08/-0.14	601g/m [0.41 lb/ft]
LWT-25-1000	25mm	+0.08/-0.14	581g/m [0.39 lb/ft]
LWT-20-1000	20mm	±0.08	450g/m [0.30 lb/ft]

LWT Lightweight Boom/Tube (3mm Wall)

Material: High Strength Aluminum

LWT Lightweight Boom Deflection Charts

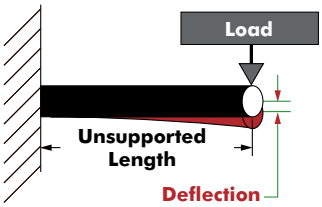

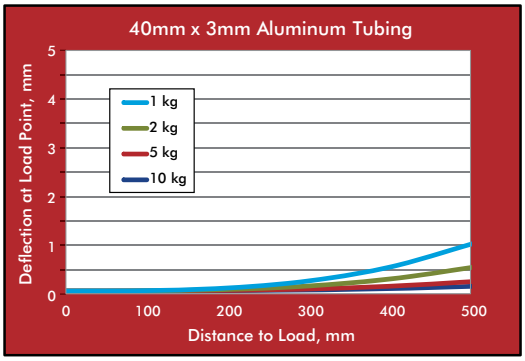

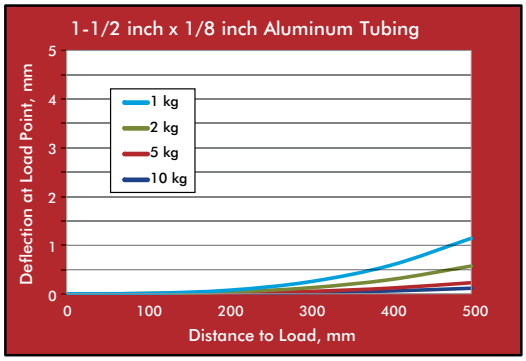

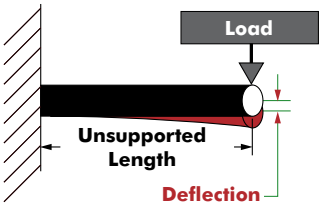

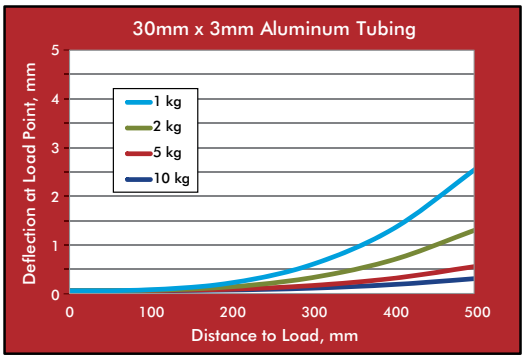

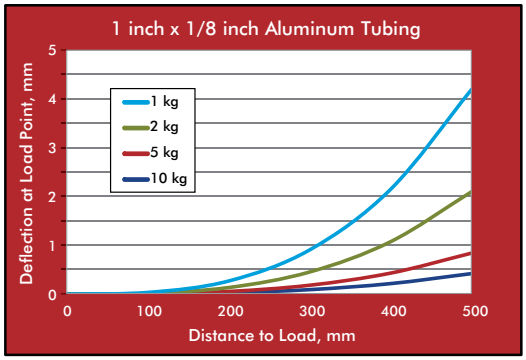

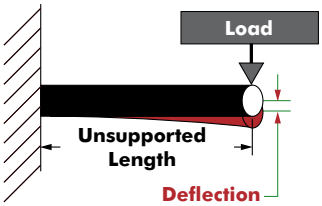

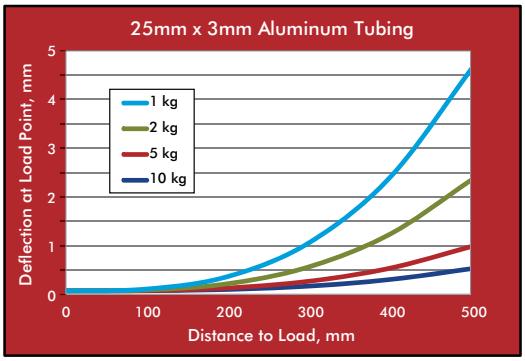

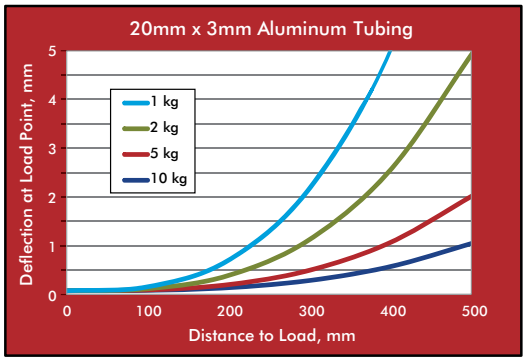

Note: Performance may vary if used with non-DESTACO components

ACCELERATE® TOOLING COLLECTION

Accelerate® Tooling Collection | Dimensions

GRS-SD-40 Crossbar Saddle w/Air (Left Hand)

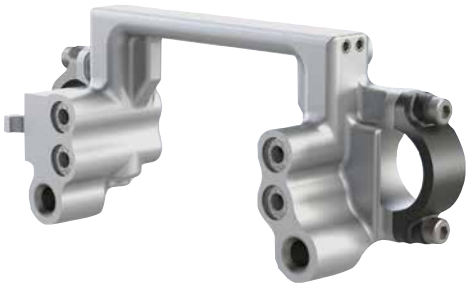

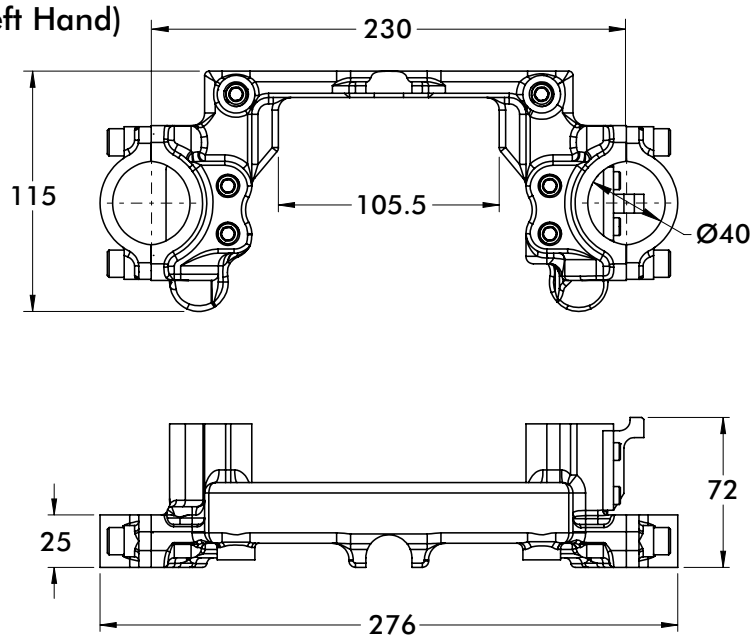

Material: High Strength Aluminum

Model Number	Weight
GRS-SD-40-LHS-A	938g [2.06 lb]

GRS-SD-40 Crossbar Saddle w/Air (Right Hand)

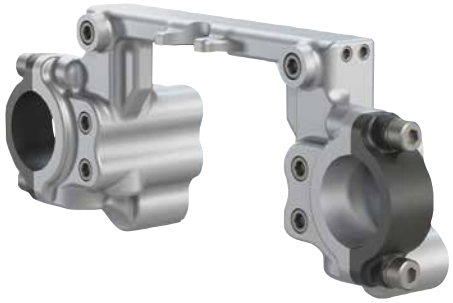

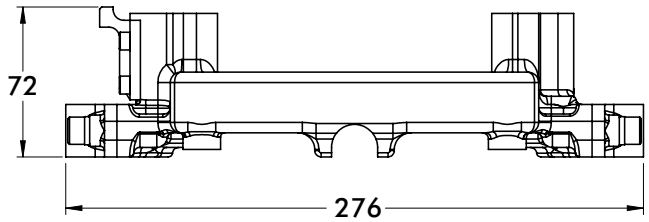

Material: High Strength Aluminum

Model Number	Weight
GRS-SD-40-RHS-A	938g [2.06 lb]

GRS-SD-40 Crossbar Saddle (Idle)

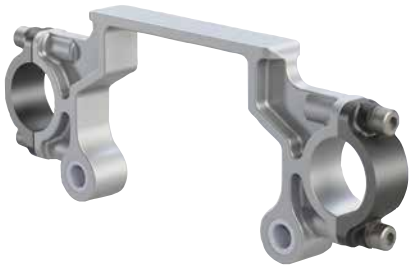

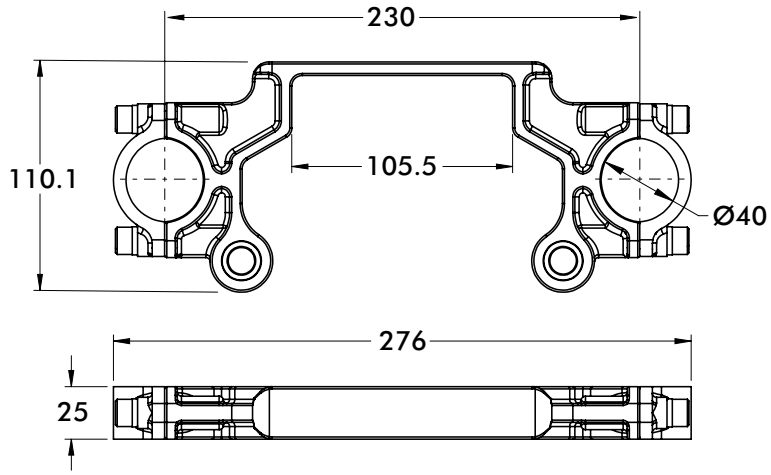

Material: High Strength Aluminum

Model Number	Weight
GRS-SD-40-NA-A	535g [1.18 lb]

Dimensions and technical information are subject to change without notice

Tri-Axis Rail Tooling Example with Accelerate® Tooling

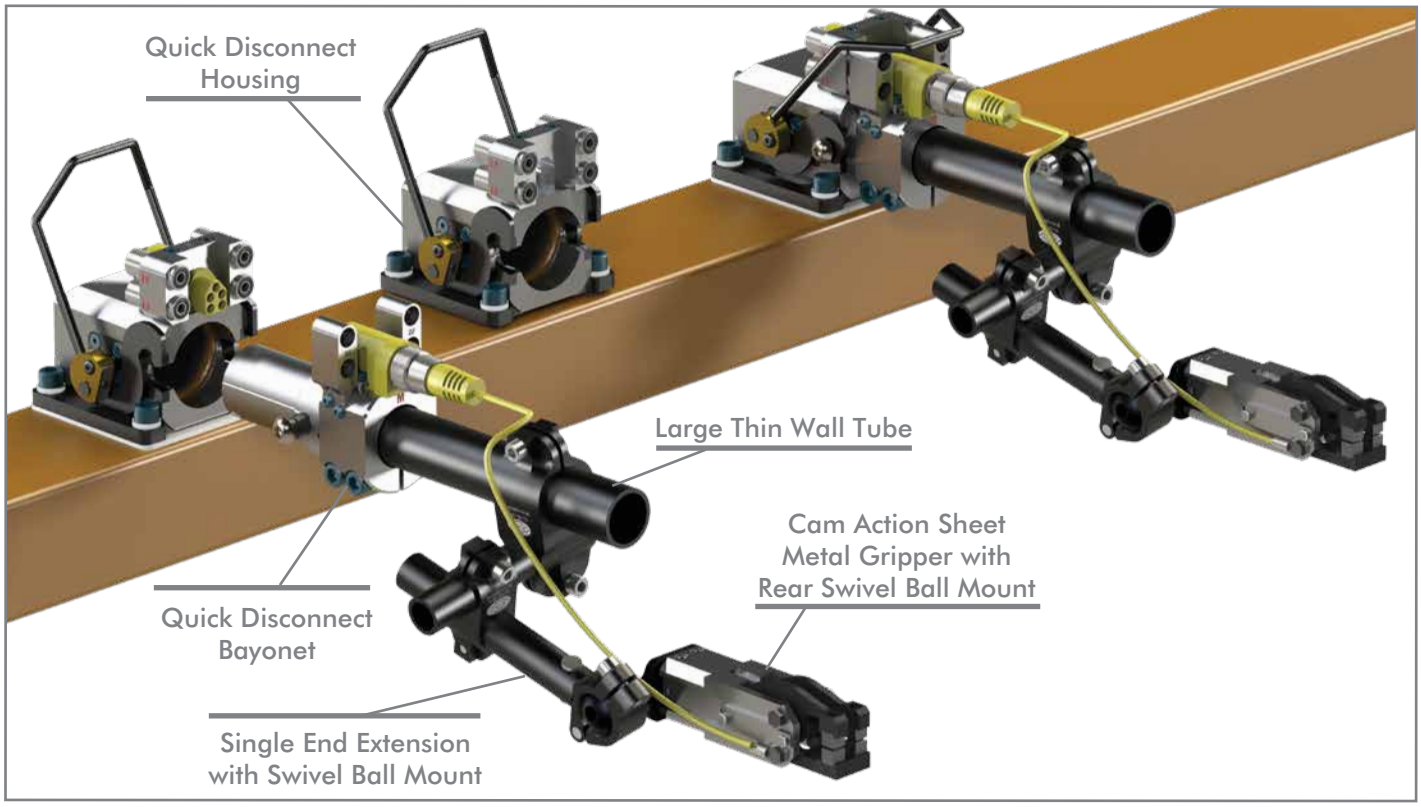

LWT Tri-Axis Tooling Example

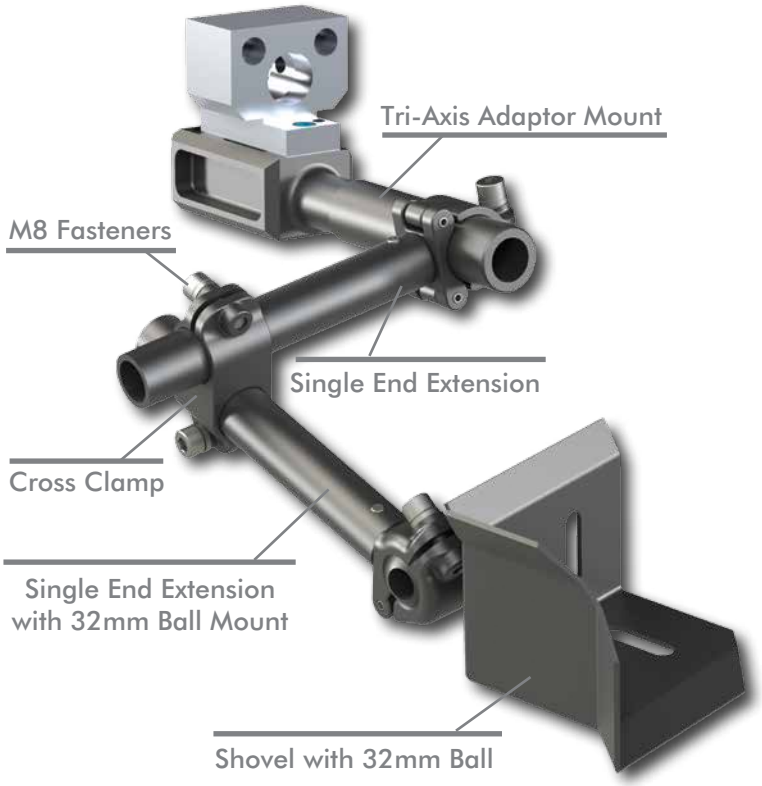

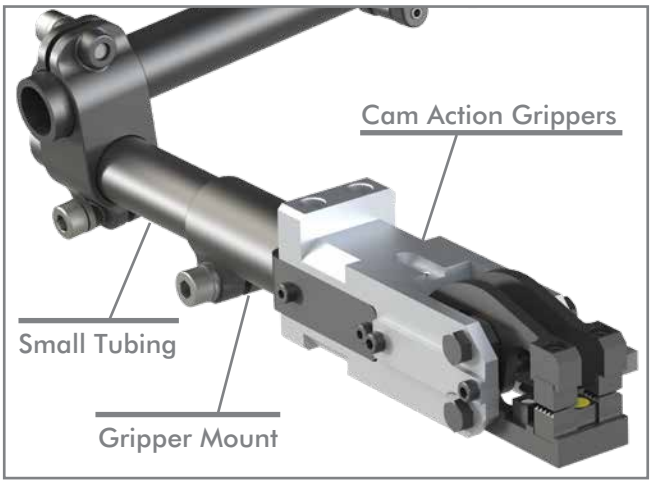

TCF, SEC, TCA SERIES

Accelerate® Tooling Collection | Dimensions

TCF Flange Mount Ø20 & Ø25mm

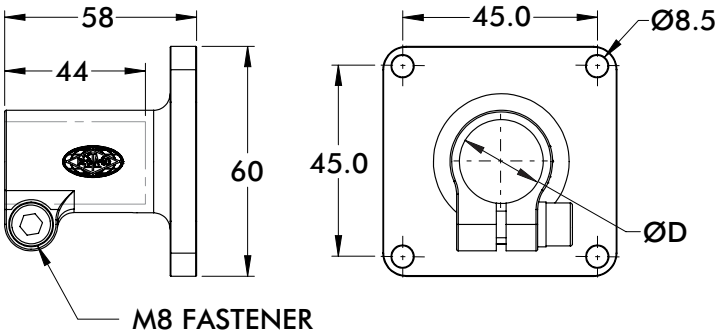

Material: High Strength Aluminum

Model Number	ØD	Weight
TCF-20M-A	20mm	121g [0.27 lb]
TCF-25M-A	25mm	98g [0.22 lb]

SEC Wrist Clamp

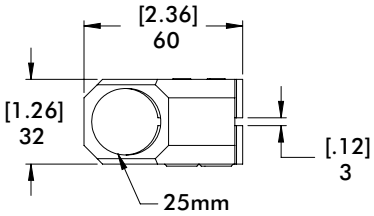

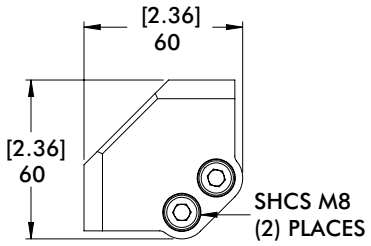

Material: Aluminum

Model Number	Weight
SEC-25M-25M-A	[0.10 lb] 47g

TCA T-Clamp Transition Brackets

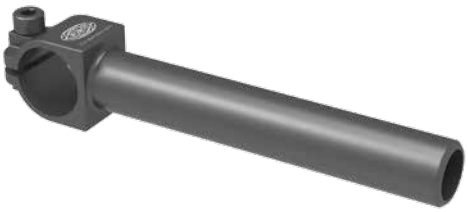

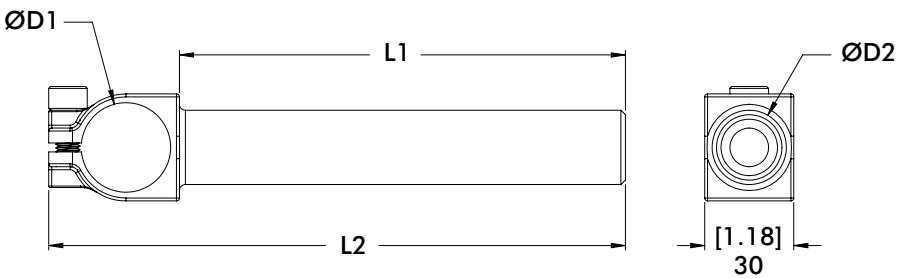

Model Number	ØD1	ØD2	L1	L2	Material	Weight
TCA-25M-25M-150-A	.98 [25]	.98 [25]	150 [5.91]	194 [7.64]	Aluminum	160g [0.35 lb]
TCA-30M-25M-150-A	1.19 [30]	.98 [25]	150 [5.91]	194 [7.64]	Aluminum	162g [0.36 lb]
TCA-20M-20M-400-A	.79 [20]	.79 [20]	400 [15.74]	438 [17.24]	Aluminum	239g [0.53 lb]
TCA-30M-30M-400-A	1.18 [30]	1.18 [30]	400 [15.74]	447 [17.60]	Aluminum	394g [0.87 lb]
TCA-20M-20M-400-S	.79 [20]	.79 [20]	400 [15.74]	438 [17.24]	Steel	384g [0.85 lb]
TCA-30M-30M-400-S	1.18 [30]	1.18 [30]	400 [15.74]	447 [17.60]	Steel	622g [1.37 lb]

Dimensions and technical information are subject to change without notice

TCL T-Clamp Ø1.00″ (in)

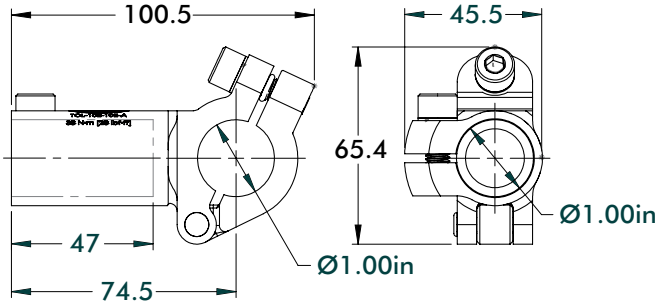

Material: High Strength Aluminum

Model Number	Weight
TCL-10E-10E-A	175g [0.39 lb]

TCLD T-Clamp

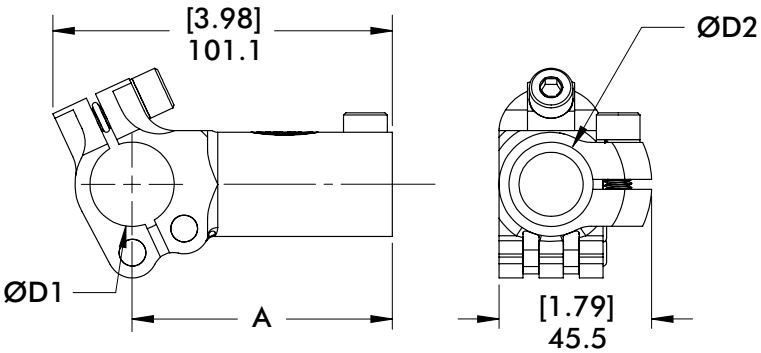

Material: High Strength Aluminum

Model Number	ØD1	ØD2	A	B	Weight
TCLD-10E-10E-A	Ø1.00 in	Ø1.00 in	77.5 [3.05]	101.1 [3.98]	194g [0.43 lb]
TCLD-10E-25M-A	Ø1.00 in	Ø25mm	77.5 [3.05]	101.1 [3.98]	194g [0.43 lb]
TCLD-25M-25M-A	Ø25mm	Ø25mm	77.5 [3.05]	101.1 [3.98]	194g [0.43 lb]
TCLD-12E-10E-A	Ø1.25 in	Ø1.00 in	74.5 [2.93]	99.1 [3.90]	186g [0.41 lb]
TCLD-30M-25M-A	Ø30mm	Ø25mm	74.5 [2.93]	99.1 [3.90]	192g [0.42 lb]

TCLD T-Clamp

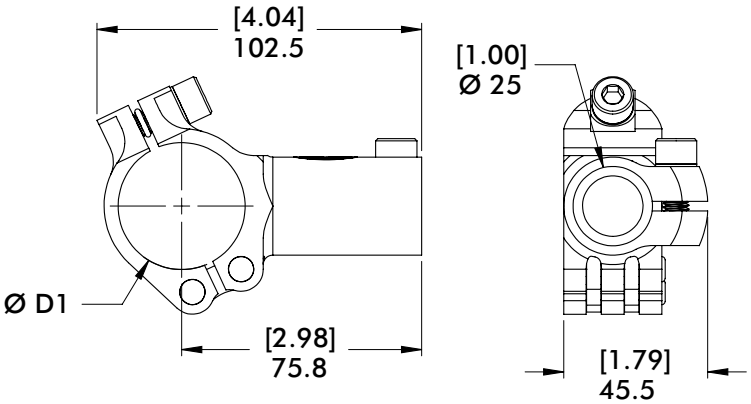

Material: High Strength Aluminum

Model Number	ØD1	ØD2	Weight
TCLD-15E-10E-A	Ø1.50 in	Ø1.00 in	193g [0.43 lb]
TCLD-40M-25M-A	Ø40mm	Ø25mm	191g [0.42 lb]

TCL, TCLD SERIES

Accelerate® Tooling Collection | Dimensions

TCL T- Clamps Ø40

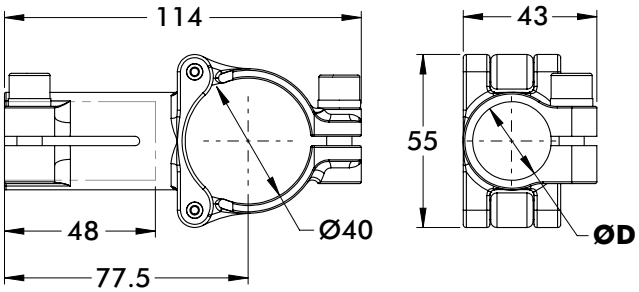

Model Number	ØD	Weight
TCL-40M-25M-A	Ø25	158g [0.35 lb]
TCL-40M-20M-A	Ø20	145g [0.32 lb]

Material: High Strength Aluminum

TCL T- Clamps Ø30 to Ø25

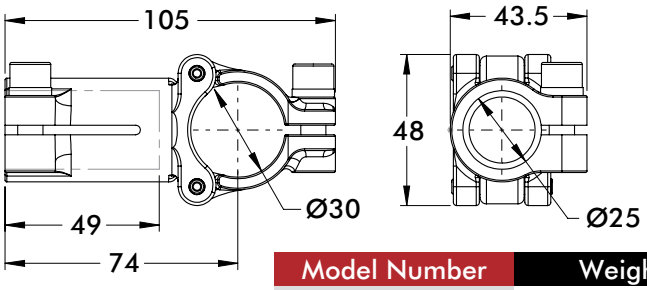

Model Number	Weight
TCL-30M-25M-A	270g [0.59 lb]

Material: High Strength Aluminum

TCLD Angled T- Clamps

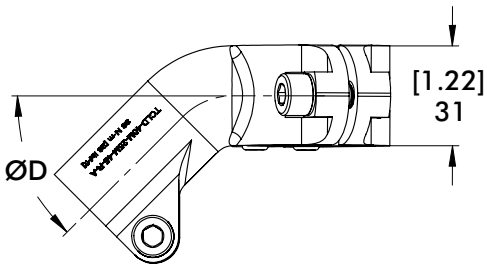

Model Number	ØD	Weight
TCLD-40M-20M-30-L-A	30°	225g [0.50 lb]
TCLD-40M-20M-30-R-A	30°	225g [0.50 lb]
TCLD-40M-20M-45-L-A	45°	230g [0.51 lb]
TCLD-40M-20M-45-R-A	45°	230g [0.51 lb]
TCLD-40M-25M-30-L-A	30°	201g [0.44 lb]
TCLD-40M-25M-30-R-A	30°	201g [0.44 lb]
TCLD-40M-25M-45-L-A	45°	206g [0.45 lb]
TCLD-40M-25M-45-R-A	45°	206g [0.45 lb]

Material: High Strength Aluminum

TCL Ball Clamps Ø40 to Ø32

Patent Pending

Material: High Strength Aluminum

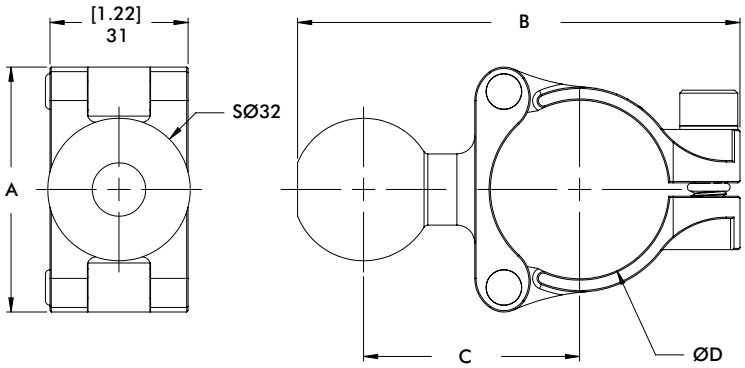

Model Number	A	B	C	ØD	Weight
TCL-40M-32B-A	55[2.17]	99.3[3.91]	48.5[1.91]	Ø40	149g [0.33 lb]
TCB-30M-32B-A	48[1.89]	89.8[3.54]	44[1.73]	Ø30	137g [0.30 lb]

TCL Ball Clamps Ø32

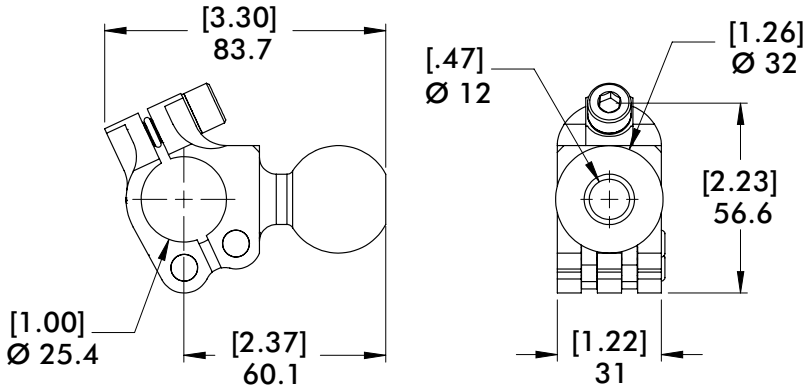

Material: High Strength Aluminum

Model Number	Weight
TCLD-10E-32B-A	166g [0.37 lb]

TCL Ø32 Ball to Ø25

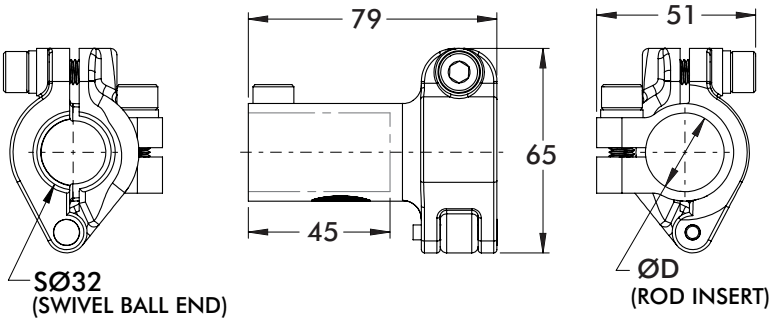

Material: High Strength Aluminum

Model Number	ØD	Weight
TCL-32B-25M-90-A	Ø25	145g [0.32 lb]
TCL-32B-20M-90-A	Ø20	157g [0.35 lb]
TCL-32B-10E-90-A	1 in	157g [0.35 lb]

TCL Ø25mm/1 in to Ø32

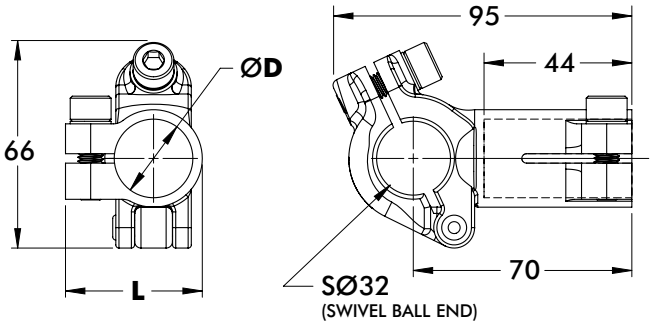

Material: High Strength Aluminum

Model Number	ØD	Weight
TCL-25M-32B-A	Ø25	147g [0.32 lb]
TCL-20M-32B-A	Ø20	128g [0.28 lb]
TCL-10E-32B-A	1 in	141g [0.31 lb]

CL SERIES

Accelerate® Tooling Collection | Dimensions

CL Cross Clamps

Material: High Strength Aluminum

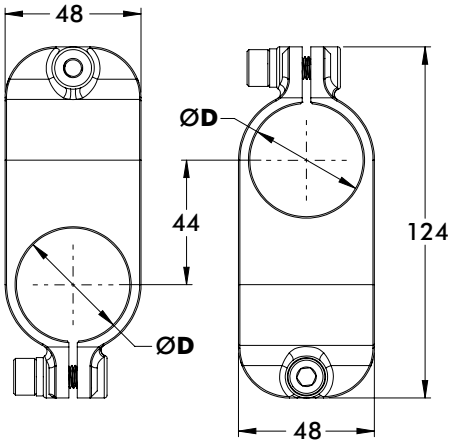

Ø40mm/1.50 in to Ø40mm/1.50 in Cross Clamp

Model Number	ØD	Weight
CL-40M-40M-A	40mm	233g [0.51 lb]
CL-15E-15E-A	1.50 in	283g [0.62 lb]

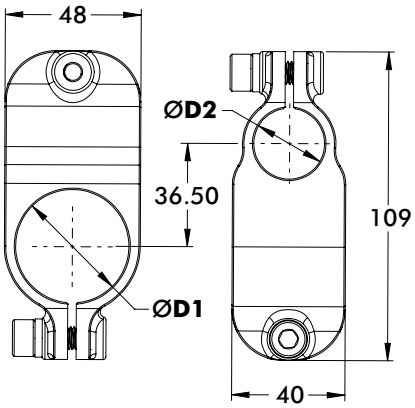

Ø40mm/1.50 in to Ø25mm/1.00 in Cross Clamp

Model Number	ØD1	ØD2	Weight
CL-40M-25M-A	40mm	25mm	214g [0.47 lb]
CL-15E-10E-A	1.50 in	1.00 in	223g [0.50 lb]

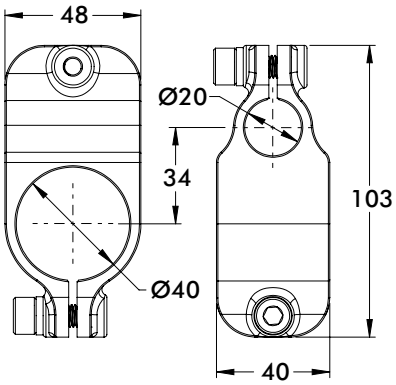

Ø40mm to Ø20mm Cross Clamp

Model Number	Weight
CL-40M-20M-A	202g [0.45 lb]

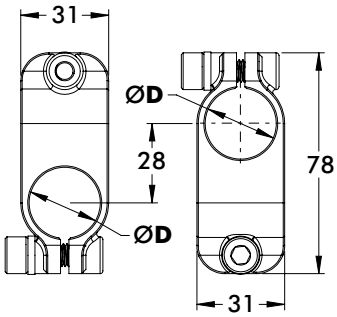

Ø25mm/1.00 in to Ø25mm/1.00 in Cross Clamp

Model Number	ØD	Weight
CL-25M-25M-A	25mm	102g [0.22 lb]
CL-10E-10E-A	1.00 in	105g [0.23 lb]

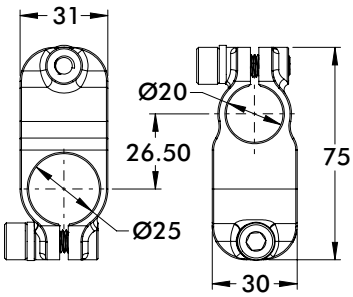

Ø25mm to Ø20mm Cross Clamp

Model Number	Weight
CL-25M-20M-A	98g [0.22 lb]

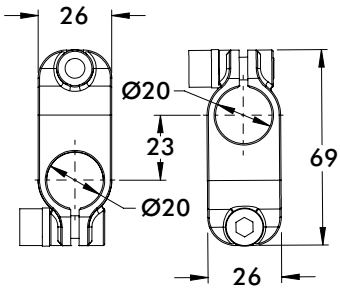

Ø20mm to Ø20mm Cross Clamp

Model Number	Material	Weight
CL-20M-20M-A	Aluminum	52g [0.11 lb]
CL-20M-20M-S	Steel	178g [0.39 lb]

Dimensions and technical information are subject to change without notice

CL Cross Clamps

Material: High Strength Aluminum

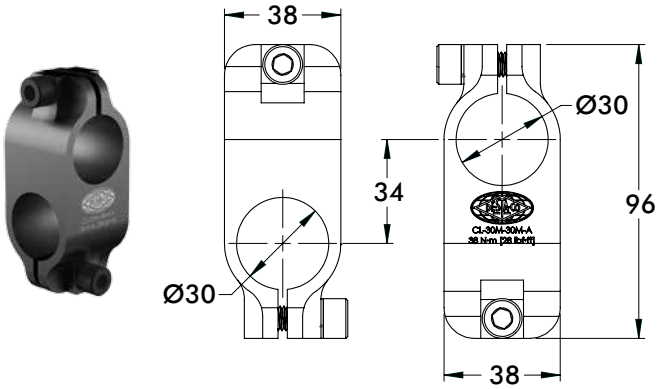

Ø30mm to Ø30mm Cross Clamp

Model Number	Material	Weight
CL-30M-30M-A	Aluminum	200g [0.44 lb]
CL-30M-30M-S	Steel	415g [0.91 lb]

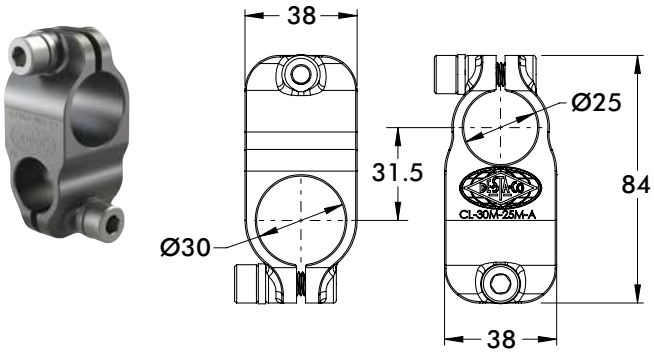

Ø30mm to Ø25mm Cross Clamp

Model Number	Weight
CL-30M-25M-A	148g [0.33 lb]

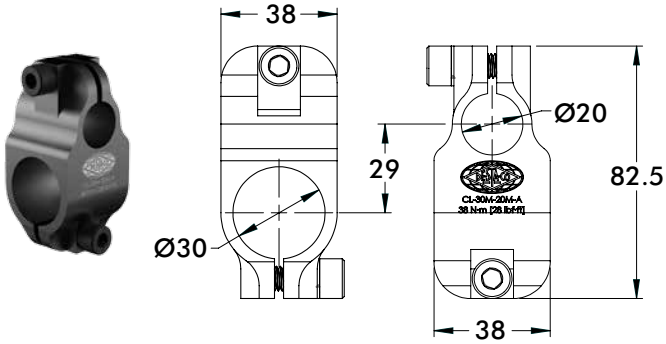

Ø30mm to Ø20mm Cross Clamp

Model Number	Weight
CL-30M-20M-A	125g [0.28 lb]

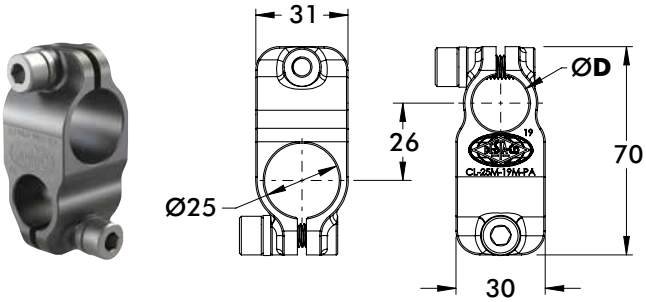

Ø25mm to Apple Core Cross Clamp

Model Number	ØD	Weight
CL-25M-19M-PA-A	19	95g [0.21 lb]
CL-25M-20M-PA-A	20	94g [0.21 lb]

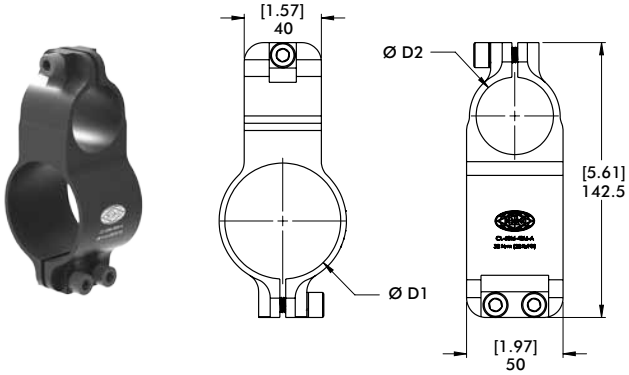

Ø60mm/2.50 in to Ø40mm/1.50 in Cross Clamp

Model Number	ØD1	ØD2	Weight
CL-60M-40M-A	60mm	40mm	276g [0.61 lb]
CL-25E-15E-A	2.50 in	1.50 in	271g [0.60 lb]

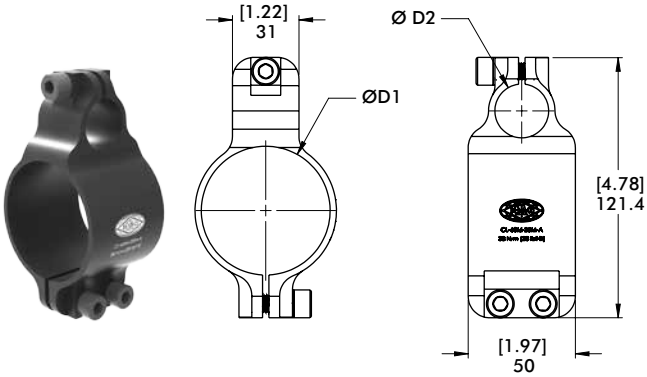

Ø60mm/2.50 in to Ø25mm/1.00 in Cross Clamp

Model Number	ØD1	ØD2	Weight
CL-60M-25M-A	60mm	25mm	220g [0.49 lb]
CL-25E-10E-A	2.50 in	1.00 in	228g [0.50 lb]

PC SERIES

Accelerate® Tooling Collection | Dimensions

PC Parallel Clamps

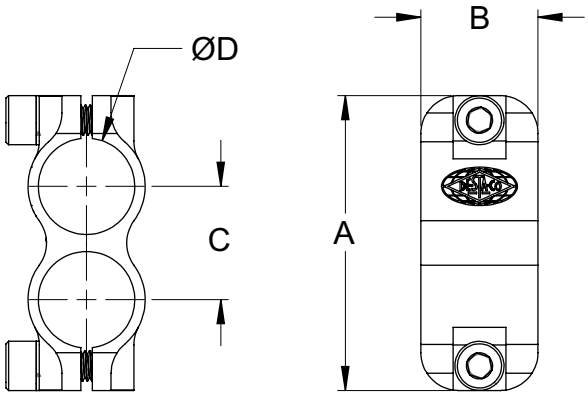

Model Number	A	B	C	ØD	Material	Weight
PC-10E-10E-A	[3.07] 78	[1.22] 31	[1.18] 30	[1.00] 25.4	Aluminum	[0.21 lb] 95g
PC-20M-20M-A	[2.72] 69	[1.02] 26	[0.91] 23	[0.79] 20	Aluminum	[0.18 lb] 83g
PC-20M-20M-S	[2.72] 69	[1.02] 26	[0.91] 23	[0.79] 20	Steel	[0.39 lb] 177g
PC-25M-25M-A	[3.07] 78	[1.22] 31	[1.18] 30	[1.00] 25.4	Aluminum	[0.21 lb] 93g
PC-30M-30M-A	[3.86] 98	[1.50] 38	[1.34] 34	[1.18] 30	Aluminum	[0.34 lb] 155g
PC-30M-30M-S	[3.86] 98	[1.50] 38	[1.34] 34	[1.18] 30	Steel	[0.83 lb] 378g

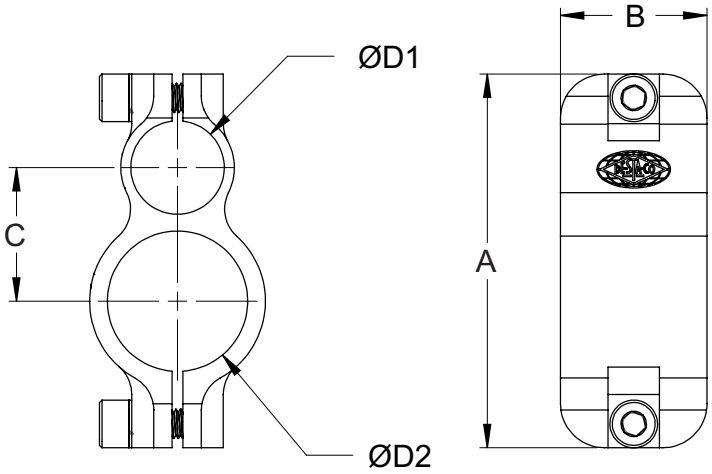

Model Number	A	B	C	ØD1	ØD2	Weight
PC-15E-10E-A	[4.02] 102	[1.57] 40	[1.44] 36.5	[1.00] 25.4	[1.50] 38.1	169g [0.37 lb]
PC-30M-20M-A	[3.29] 83.5	[1.5] 38	[1.12] 28.5	[0.79] 20	[1.18] 30	129g [0.28 lb]
PC-30M-25M-A	[3.52] 89.5	[1.5] 38	[1.24] 31.5	[0.98] 25	[1.18] 30	136g [0.30 lb]
PC-40M-25M-A	[4.02] 102	[1.57] 40	[1.44] 36.5	[0.98] 25	[1.57] 40	158g [0.35 lb]

Dimensions and technical information are subject to change without notice

ES Single End Extensions

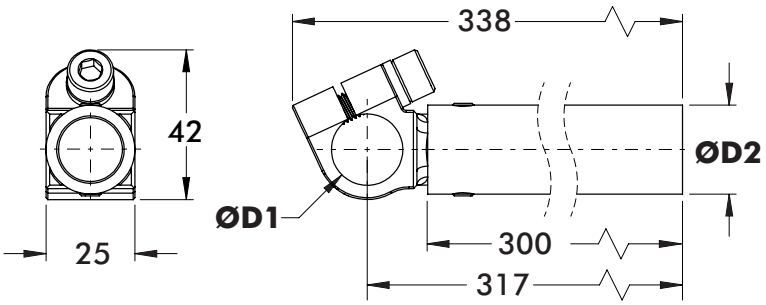

Material: High Strength Aluminum

Model Number	ØD1	ØD2	Weight
ES-20M-25M-300-A	20mm	25mm	250g [0.55 lb]
ES-20M-20M-300-A	20mm	20mm	196g [0.43 lb]
ES-19M-25M-300-A	19mm	25mm	250g [0.55 lb]
ES-19M-10E-300-A	19mm	1.00 in	269g [0.59 lb]

ES Ø20 to Ø20

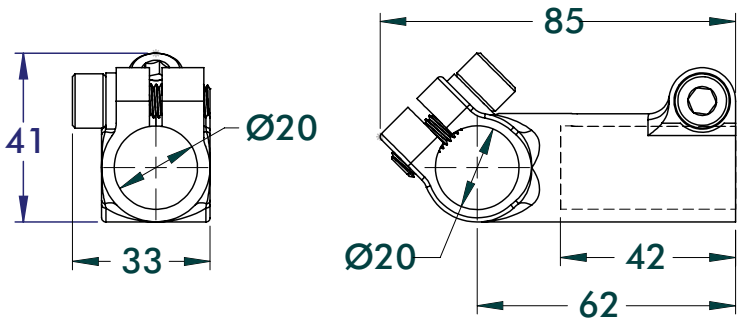

Material: High Strength Aluminum

Model Number	Weight
ES-20M-20M-A	100g [0.22 lb]

Ball Extensions

ES 32mm

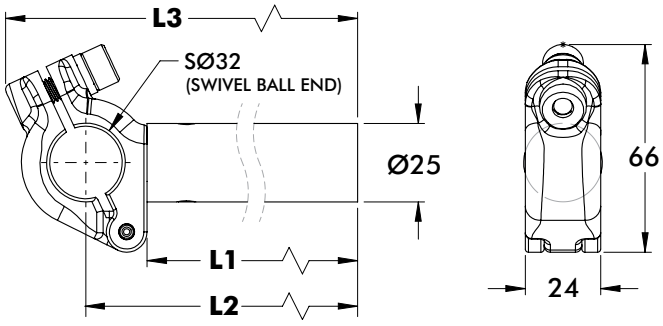

Material: High Strength Aluminum

Model Number	L1	L2	L3	Weight
ES-32B-10E-300-A	300	320	345	277g [0.61 lb]
ES-32B-20M-300-A	300	320	345	225g [0.50 lb]
ES-32B-25M-300-A	300	320	345	262g [0.56 lb]
ES-32B-25M-600-A	600	620	645	437g [0.96 lb]

ES, ESS SERIES

Accelerate® Tooling Collection | Dimensions

ES Ball Extension 28.58mm

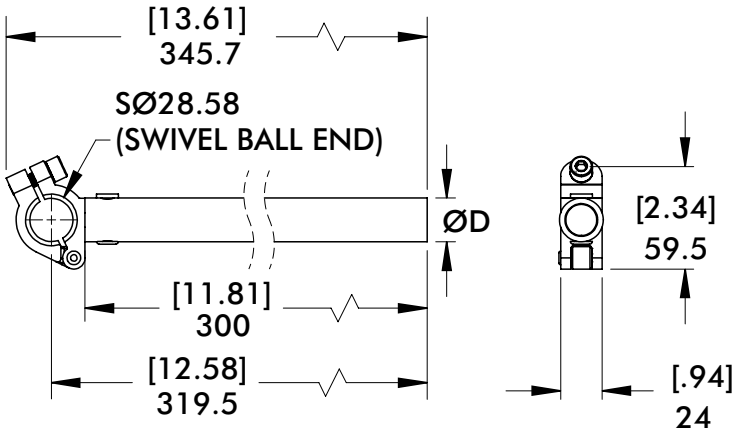

Material: High Strength Aluminum

Model Number	ØD	Weight
ES-B112-25M-300-A	[.98] 25	[0.67 lb] 302g
ES-B112-10E-300-A	[1.00] 25.4	[0.67 lb] 302g

ESS Ball Extension 32mm

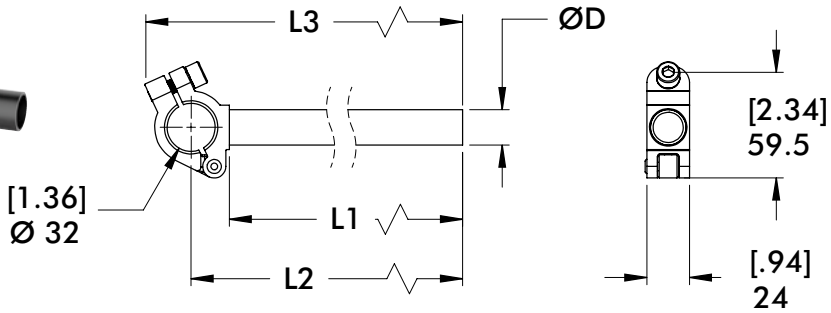

Material: Steel

Model Number	ØD	L1	L2	L3	Weight
ESS-32B-20M-300-S	20 [.79]	298 [11.73]	319.5 [12.58]	345 [13.58]	410g [0.90 lb]
ESS-32B-20M-600-S	20 [.79]	598 [23.54]	598 [23.54]]	645 [25.39]	674g [1.48 lb]
ESS-32B-30M-300-S	30 [1.18]	298 [11.73]	319.5 [12.58]	345 [13.58]	516g [1.14 lb]
ESS-32B-30M-600-S	30 [1.18]	598 [23.54]	598 [23.54]	645 [25.39]	830g [1.83 lb]

ESS-90 Ball Extension 32mm

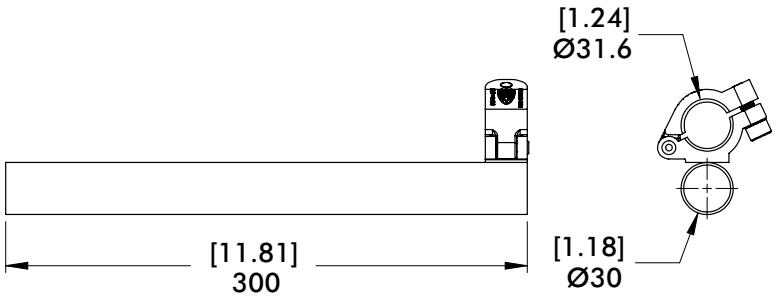

Model Number	ØD	Weight
ESS-32B-30M-90-300-S	30 [1.18]	518.4g [1.14 lb]

Dimensions and technical information are subject to change without notice

GTA - Tri Axis Adaptor Mounts

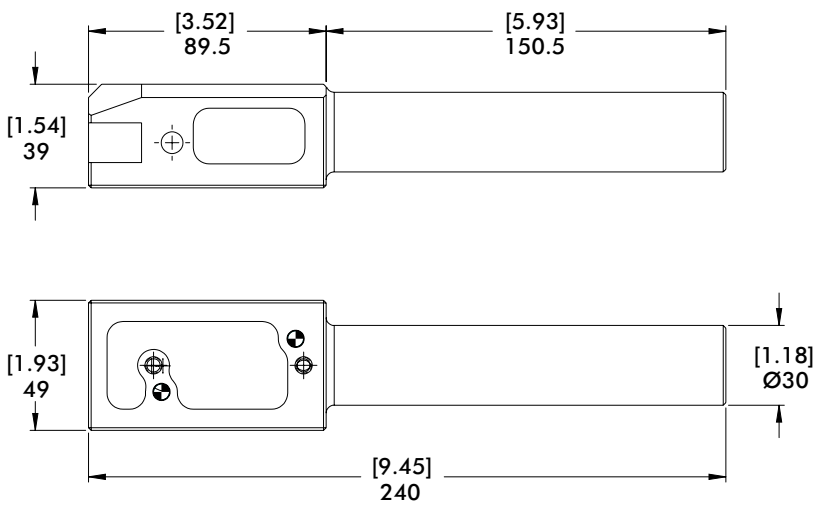

Material: High Strength Aluminum

Model Number	Weight
GTA-30-150	412g [0.91 lb]

GTA

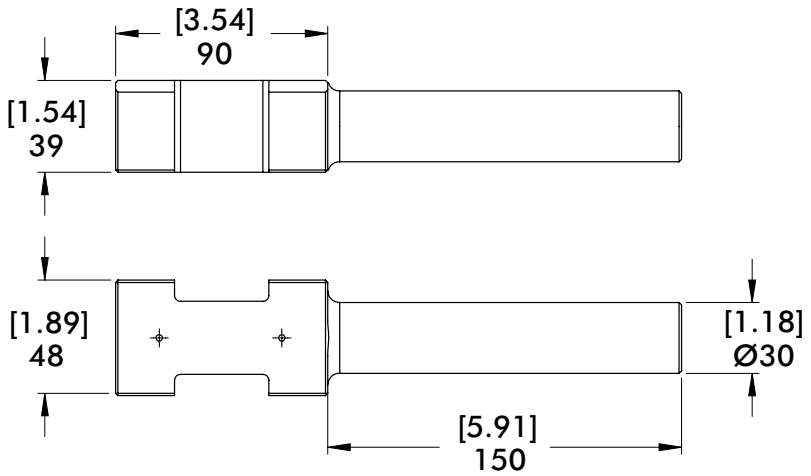

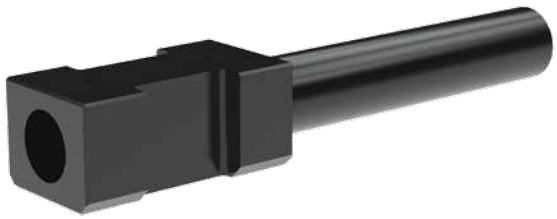

Material: High Strength Aluminum

Model Number	Weight
GTA-30-LTP	499g [1.10 lb]

LTP

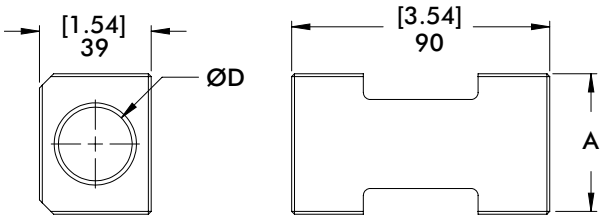

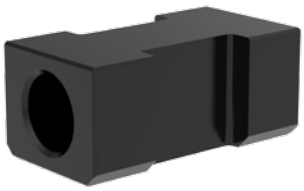

Material: Steel

Model Number	A	ØD	Weight
CPI-LTP-B-10	48 [1.89]	25.4 [1.00]	771g [1.70 lb]
CPI-LTP-B-11	49 [1.93]	27.3 [1.07]	726g [1.60 lb]

TPA SERIES

Accelerate® Tooling Collection | Dimensions

TPA Single Flange Mount

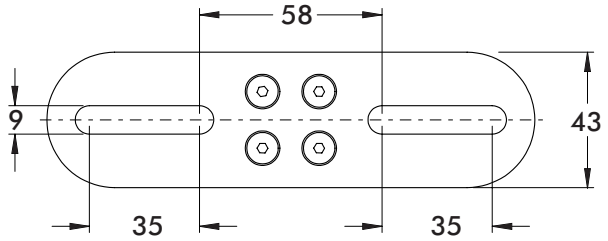

TPA-25-35

TPA-30-35

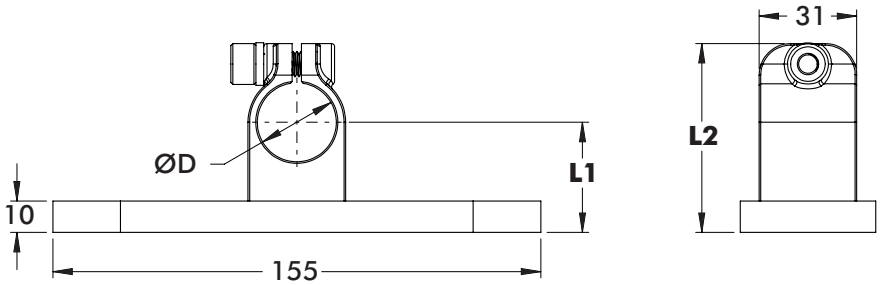

TPA-25-65
TPA-30-65

Material: High Strength Aluminum

Model Number	L1	L2	ØD	Weight
TPA-20-35-LWT-A	35	60	20	234g [0.52 lb]
TPA-25-35-LWT-A	35	60	25	246g [0.54 lb]
TPA-25-65-LWT-A	63	88	25	322g [0.71 lb]
TPA-30-35-LWT-A	35	67	30	265g [0.58 lb]
TPA-30-35-LWT-A	63	95	30	361g [0.80 lb]

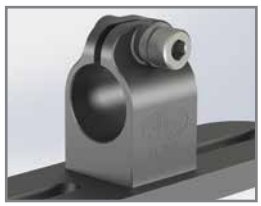

Configured 90°

TPA Double Flange Mount

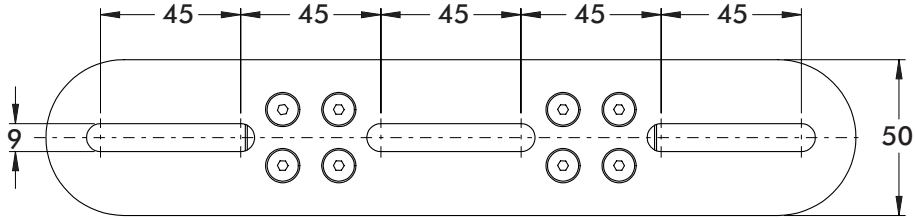

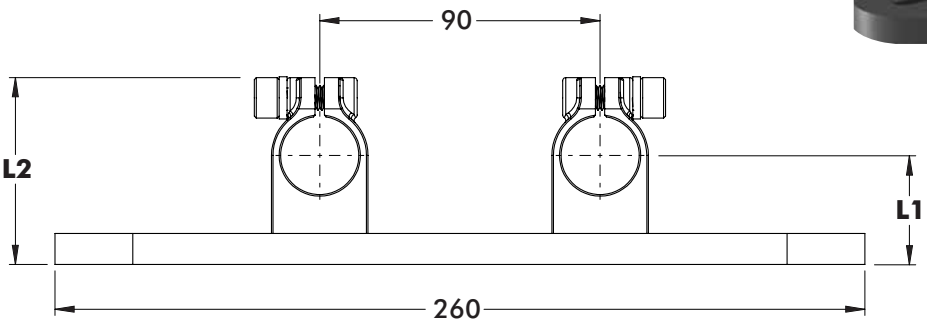

Material: High Strength Aluminum

Model Number	L1	L2	Weight
TPA-25-25-65-LWT-A	65	88	644g [1.42 lb]

Configured 90°

Dimensions and technical information are subject to change without notice

TPA SERIES

Accelerate® Tooling Collection | Dimensions

TPA Base Mount

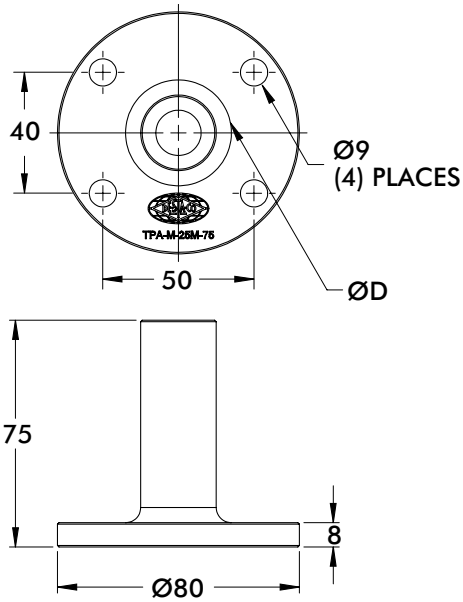

Material: High Strength Aluminum

Model Number	ØD	Weight
TPA-M-20M-75	20mm	151g [0.33 lb]
TPA-M-25M-75	25mm	164g [0.36 lb]

TPA 90° Base Clamp

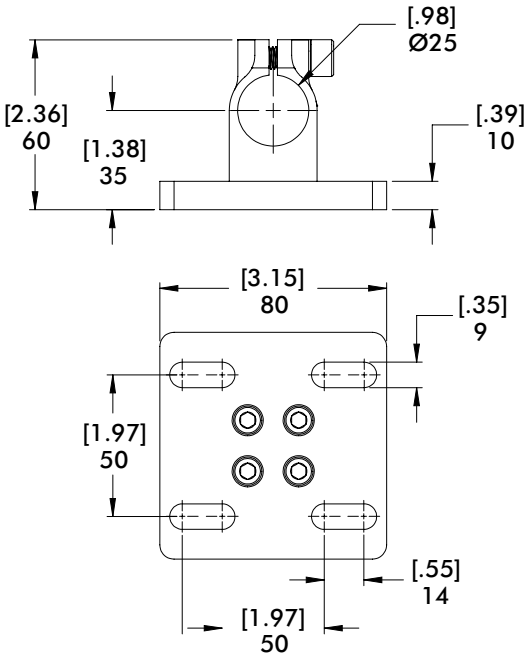

Material: High Strength Aluminum

Model Number	Weight
TPA-G-25-35-A	258g [0.57 lb]

TPA Flange Extension

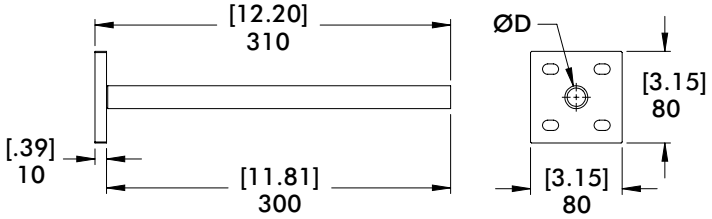

Material: Steel

Model Number	ØD	Weight
TPA-00-20-300-GD	20mm	736g [1.62 lb]
TPA-00-25-300-GD	25mm	810g [1.79 lb]
TPA-00-30-300-GD	30mm	884g [1.95 lb]

TPA, TPB SERIES

Accelerate® Tooling Collection | Dimensions

TPA 90° Slotted Flange Extension

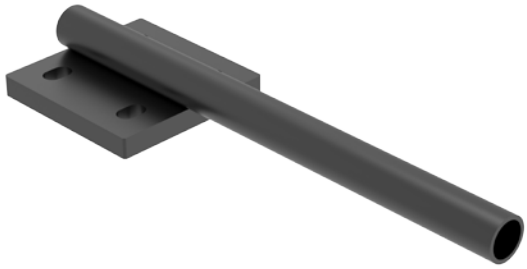

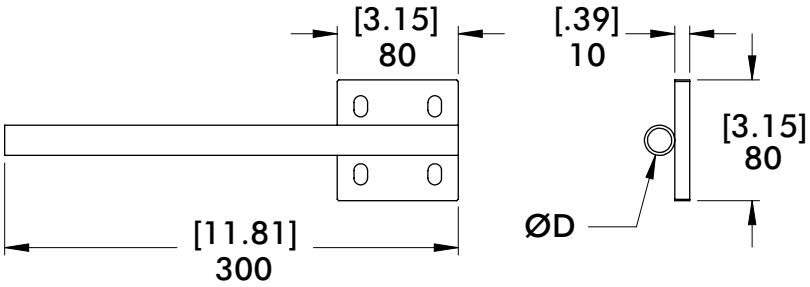

Material: Steel

Model Number	ØD	Weight
TPA-90-20-300-GD	20mm	736g [1.62 lb]
TPA-90-25-300-GD	25mm	810g [1.79 lb]
TPA-90-30-300-GD	30mm	884g [1.95 lb]

TPA 90° Slotted Flange Extension

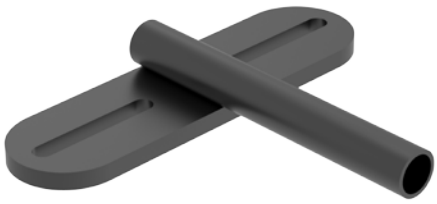

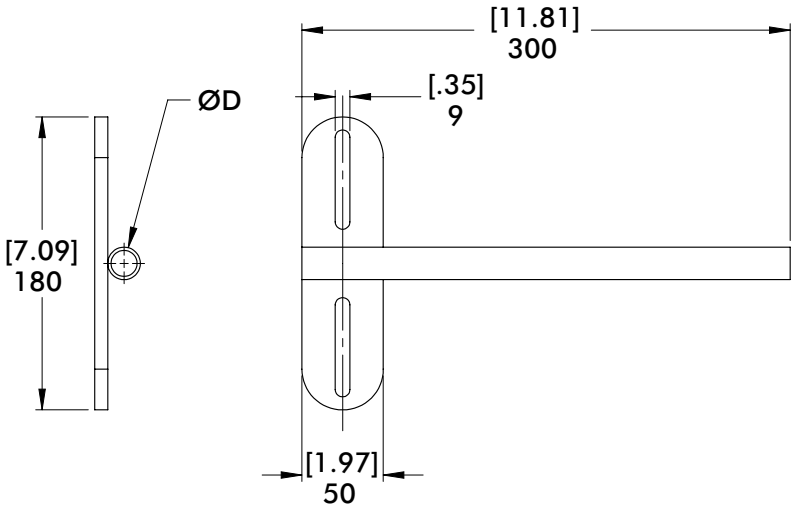

Material: Steel

Model Number	ØD	Weight
TPA-90-20-300	20mm	733g [1.62 lb]
TPA-90-25-300	25mm	807g [1.78 lb]
TPA-90-30-300	30mm	881g [1.94 lb]

TBS Ball Extension

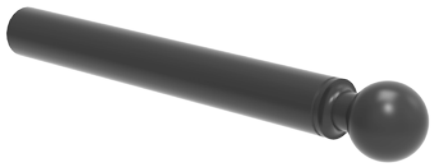

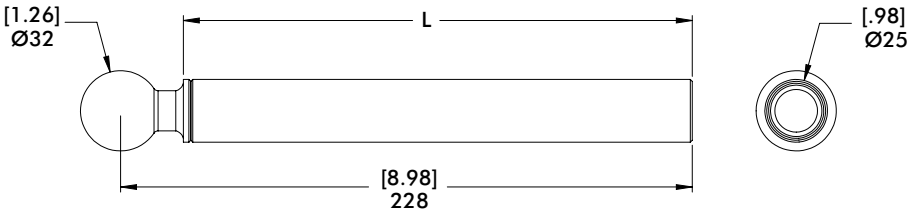

Material: Steel

Model Number	L	Weight
TBS-32B-25M-200-A	[7.87] 200	[0.75 lb] 339g
TBS-32B-25M-300-A	[11.81] 300	[1.43 lb] 648g

TPB, 1T SERIES

Accelerate® Tooling Collection | Dimensions

TPB - Transfer Press Bayonent

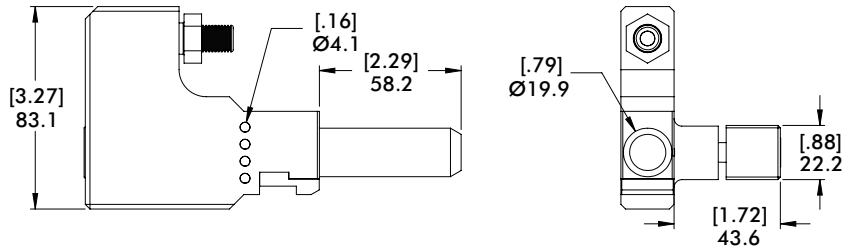

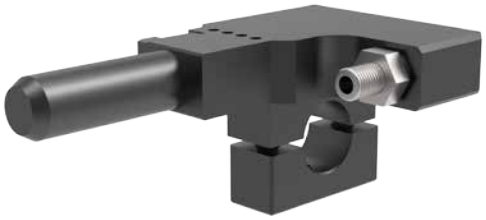

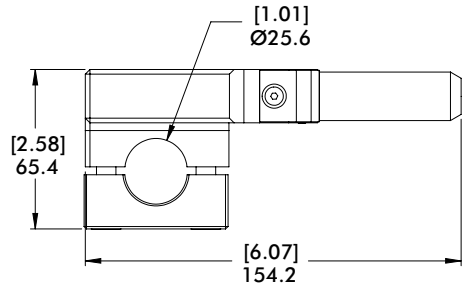

Material: Steel

Model Number	Weight
CPI-TPB-HYU-10-1A-ST	734g [1.62 lb]

1T - One Touch Finger Tool 25mm

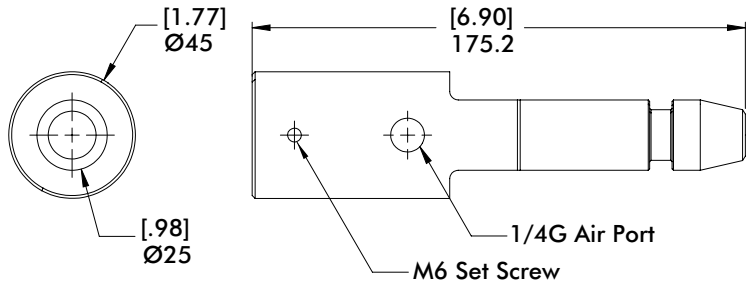

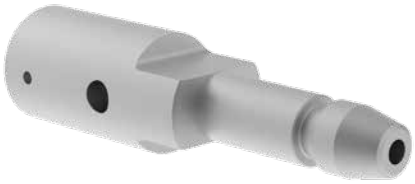

Model Number	Material	Weight
CPI-1T-25F	Steel	1.05kg [2.31 lb]
CPI-1T-25F-A	Aluminum	0.36kg [0.79 lb]

1T - One Touch Finger Tool 40mm

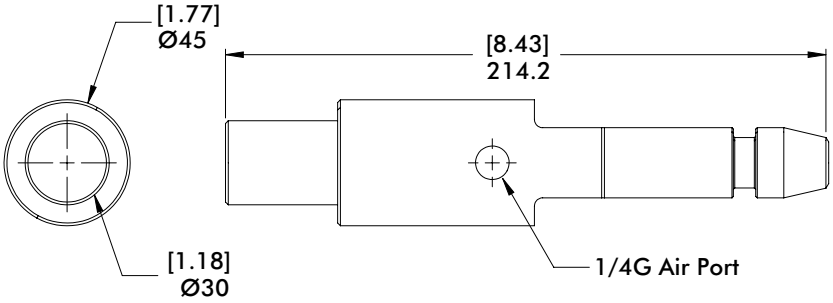

Model Number	Material	Weight
CPI-1T-33M	Steel	1.42kg [3.13 lb]
CPI-1T-33M-A	Aluminum	0.49kg [1.08 lb]

LPT SERIES

Accelerate® Tooling Collection | Dimensions

LTP Double T-Clamp

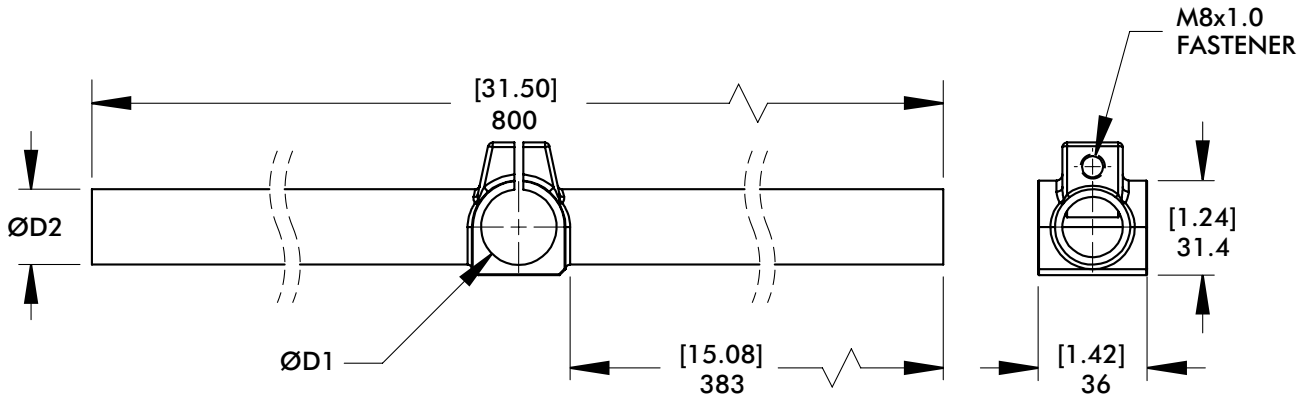

Material: Steel

Model Number	ØD1	ØD2	Weight
TCA-20M-20MD-400-A	20mm	20mm	974.7g [2.15 lb]
TCA-25M-20MD-400-A	25mm	20mm	1001.8g [2.21 lb]
TCA-25M-25MD-400-A	25mm	25mm	1245.3g [2.75 lb]
TCA-30M-30MD-400-A	30mm	30mm	1546.6g [3.41 lb]

Dimensions and technical information are subject to change without notice

LTP Frame

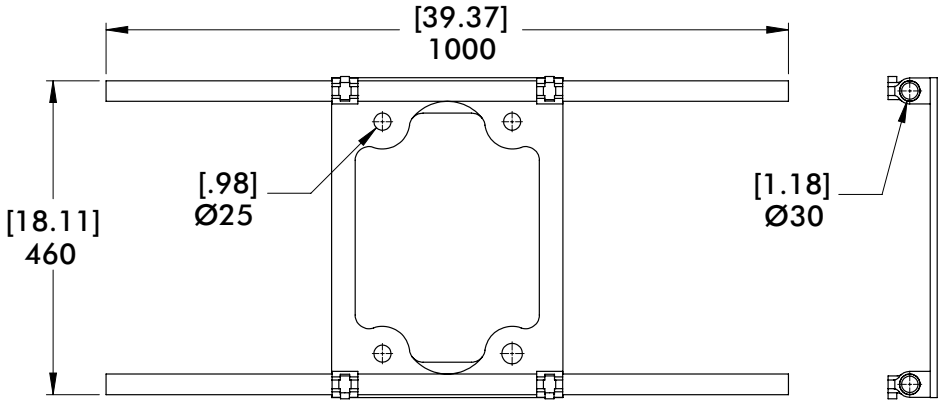

Model Number	Weight
LTP-30M-25-30-1000-A	3939g [8.68 lb]

LTP Pin

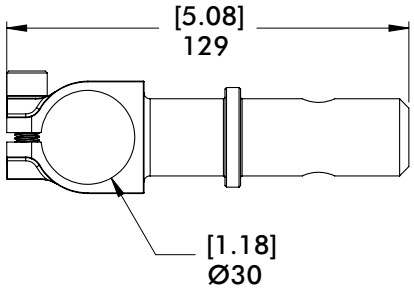

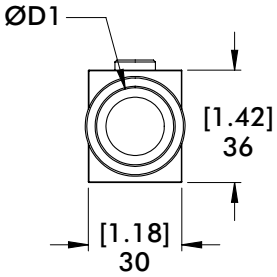

LTP-00-30-20-A
LTP-00-30-25-A

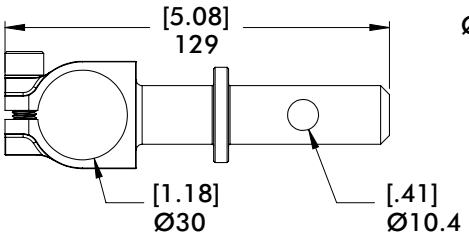

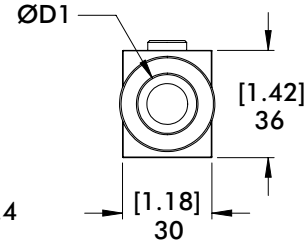

LTP-90-30-20-A
LTP-90-30-25-A

Material: Steel

Model Number	ØD1	Weight
LTP-00-30-20-A	20mm	136g [0.30 lb]
LTP-00-30-25-A	25mm	173g [0.38 lb]
LTP-90-30-20-A	20mm	136g [0.30 lb]
LTP-90-30-25-A	25mm	173g [0.38 lb]

CP, SGM SERIES

Accelerate® Tooling Collection | Lower Nest Tooling Example

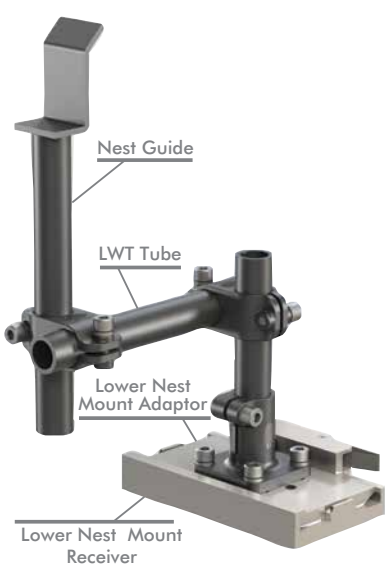

CP Center Pin

Ø20/Ø25, 200mm Length

Model Number	ØD	Weight
CP-20-200	20	427g [0.94 lb]
CP-25-200	25	640g [1.41 lb]

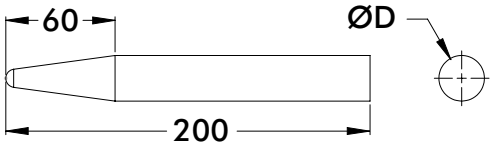

Material: Steel

SGM Mount Receiver

Model Number	Material	Weight
CPI-SGM-TH-USR-AL	Aluminum	670g [1.48 lb]
CPI-SGM-TH-USR	Steel	1730g [3.81 lb]

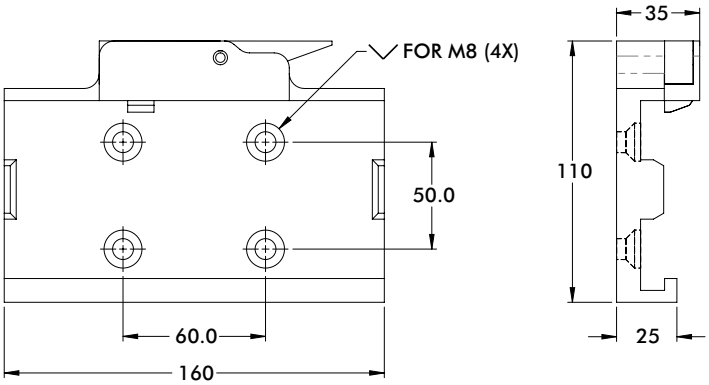

SGM Mount Adaptor

Model Number	Material	Weight
CPI-SGM-TH-USA-AL	Aluminum	287g [0.63 lb]
CPI-SGM-TH-USA	Steel	839g [1.85 lb]

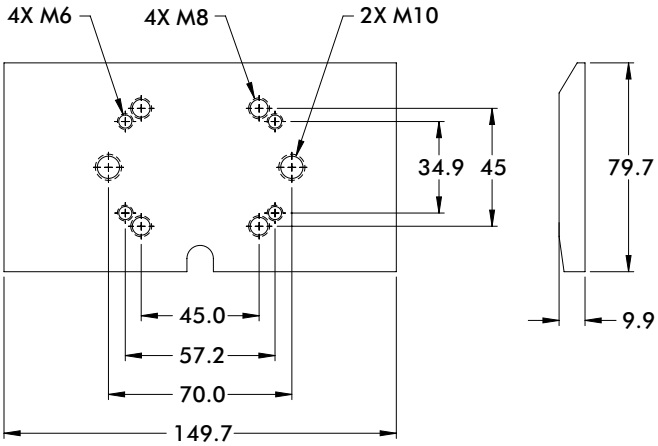

Dimensions and technical information are subject to change without notice

GTS Shovel with Welded Post

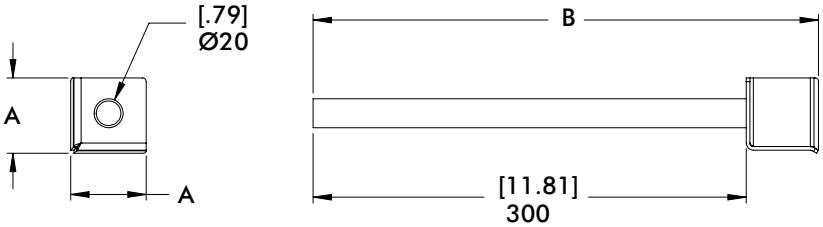

Material: Steel

Model Number	A	B	ØD	Weight
GTS-40-40-40-20M-A	42.2 [1.66]	340 [13.39]	Ø20 [0.79]	290g [0.64 lb]
GTS-40-40-40-30M-A	42.2 [1.66]	340 [13.39]	Ø30 [1.18]	400g [0.88 lb]
GTS-50-50-50-20M-A	52.2 [2.05]	350 [13.78]	Ø20 [0.79]	341g [0.75 lb]
GTS-50-50-50-30M-A	52.2 [2.05]	350 [13.78]	Ø30 [1.18]	451g [0.99 lb]

NPG Nest Guide

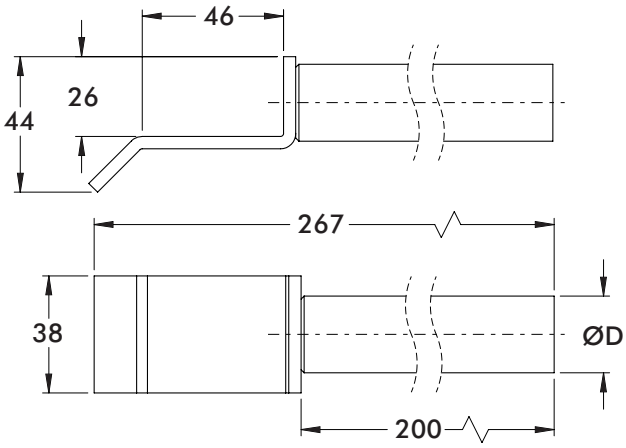

Material: Steel

Ø20/Ø25, 200mm Length

Model Number	ØD	Weight
NPG-25-200	25	432g [0.95 lb]
NPG-20-200	20	365g [0.80 lb]

GT SERIES

Accelerate® Tooling Collection | Dimensions

GT-BGA 32mm Ball Gripper Mount

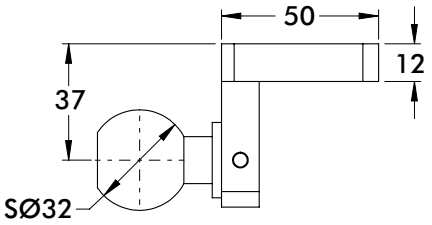

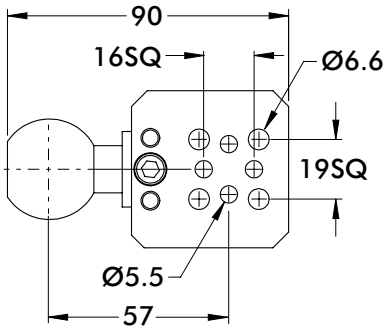

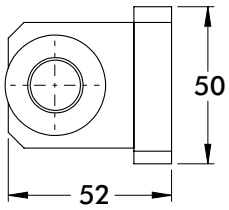

Material: High Strength Aluminum

Model Number	Weight
GT-BGA-A	174g [0.38 lb]

GT-BGA Paddle Gripper Mount

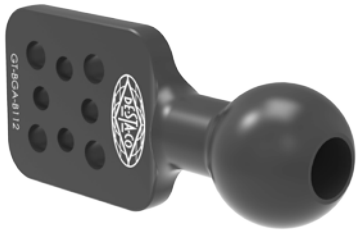

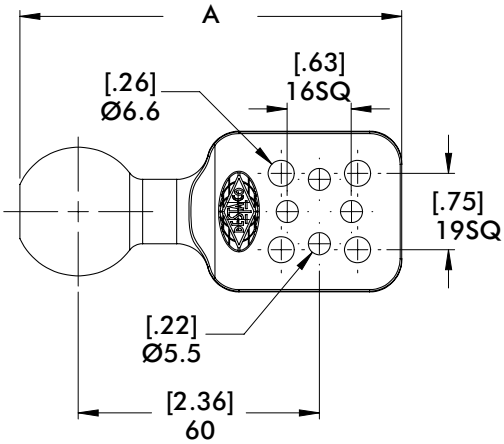

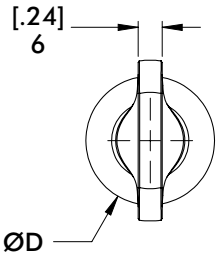

Material: High Strength Aluminum

Model Number	ØD	A	Weight
GT-BGA-B112	28.6 [1.12]	93 [3.66]	66g [0.15 lb]
GT-BGA-32B	32 [1.26]	95 [3.74]	79g [0.17 lb]

GT-UGA Side Mount Extension

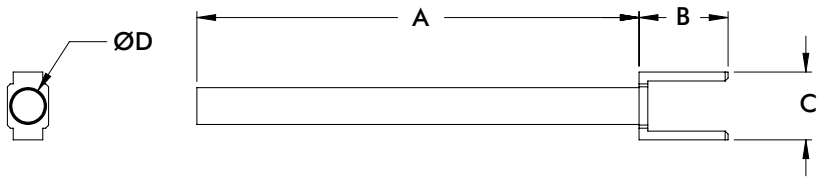

Material: Steel

Model Number	A	B	C	ØD	Weight
GT-UGA-84A2-20M-400-A	400 [15.74]	60.5 [2.38]	46 [1.81]	20 [0.79]	425g [0.94 lb]
GT-UGA-84A2-25M-300-A	300 [11.81]	60.5 [2.38]	46 [1.81]	25 [0.98]	412g [0.91 lb]
GT-UGA-84A2-30M-400-A	400 [15.74]	60.5 [2.38]	46 [1.81]	30 [1.18]	582g [1.28 lb]
GT-UGA-84A3-20M-400-A	400 [15.74]	51 [2.01]	58 [2.28]	20 [0.79]	475g [1.05 lb]
GT-UGA-84A3-25M-300-A	300 [11.81]	51 [2.01]	58 [2.28]	25 [0.98]	462g [1.02 lb]
GT-UGA-84A3-30M-400-A	400 [15.74]	51 [2.01]	58 [2.28]	30 [1.18]	631g [1.39 lb]

GT-UGA Angled Side Mount Extension

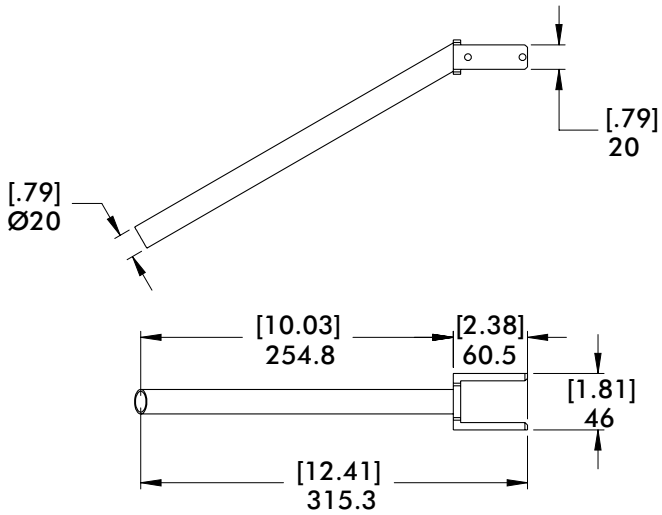

Material: Steel

Model Number	Weight
GT-UGA-84A2-20M-300-30-A	353g [0.78 lb]

GT-UGA Side Mount Clamp

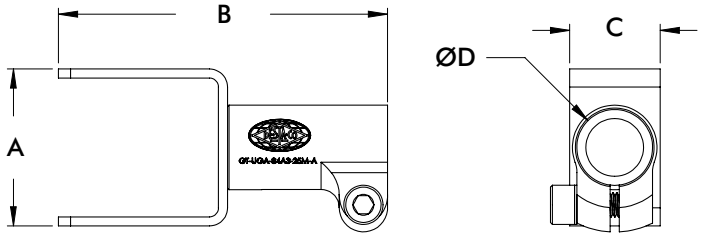

Material: Steel

Model Number	A	B	C	D	Weight
GT-UGA-84A2-20M-A	40 [1.57]	116 [4.57]	20 [0.79]	20 [0.79]	165g [0.36 lb]
GT-UGA-84A2-25M-A	40 [1.57]	116 [4.57]	20 [0.79]	25 [0.98]	184g [0.41 lb]
GT-UGA-84A2-30M-A	40 [1.57]	116 [4.57]	20 [0.79]	30 [1.18]	200g [0.44 lb]
GT-UGA-84A3-20M-A	52 [2.05]	109 [4.29]	30 [1.18]	20 [0.79]	194g [0.43 lb]
GT-UGA-84A3-25M-A	52 [2.05]	109 [4.29]	30 [1.18]	25 [0.98]	213g [0.47 lb]
GT-UGA-84A3-30M-A	52 [2.05]	109 [4.29]	30 [1.18]	30 [1.18]	228g [0.50 lb]

GT-OPS, SAP SERIES

Accelerate® Tooling Collection | Dimensions

GT-OPS Jaw Sensor Mount

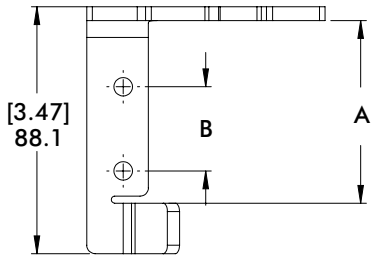

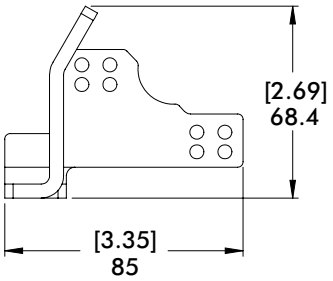

Material: Steel

Model Number	A	B	Weight
GT-OPS-84A2-LH-A	63.5 [2.50]	17.5 [0.69]	171g [0.38 lb]
GT-OPS-84A2-RH-A	63.5 [2.50]	17.5 [0.69]	171g [0.38 lb]
GT-OPS-84A3-LH-A	65.1 [2.56]	30 [1.18]	192g [0.42 lb]
GT-OPS-84A3-RH-A	65.1 [2.56	30 [1.18]	192g [0.42 lb]

SAP Sensor Clamp Mount

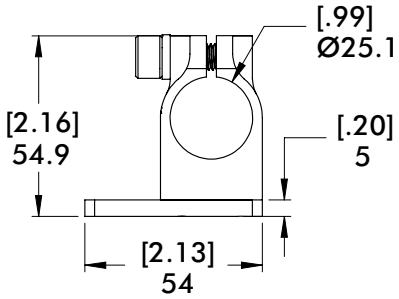

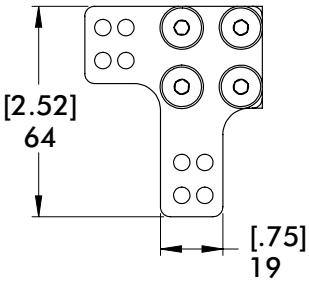

Material: High Strength Aluminum

Model Number	Weight
SAP-OPS-25M-A	120g [0.26 lb]

SAP Sensor Extension Mount

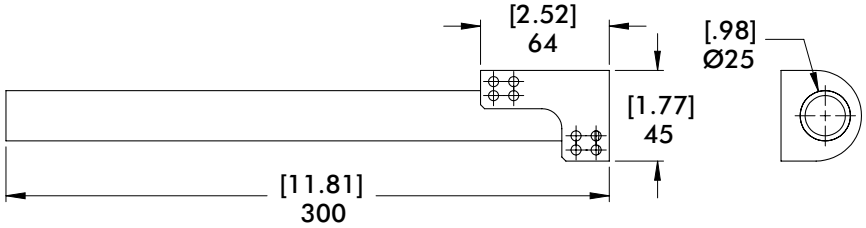

Material: Steel

Model Number	Weight
SAP-OPS-25M-300-LH-A	515g [1.14 lb]
SAP-OPS-25M-300-RH-A	515g [1.14 lb]

GTS-100 32mm Ball 80mm Shovel

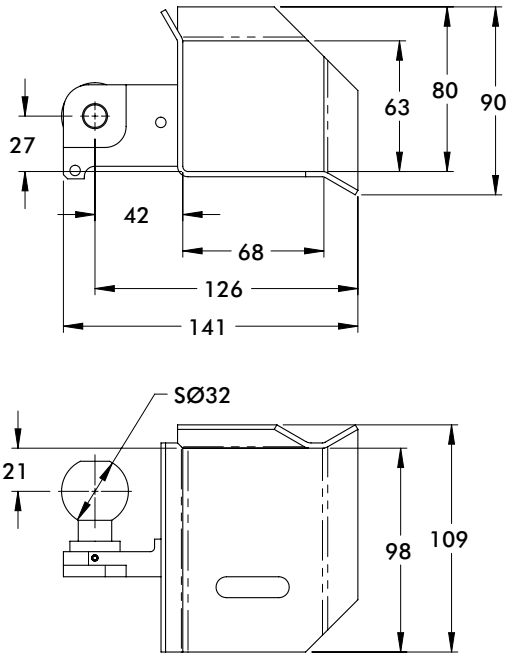

Optional spare parts

28.58mm Ball

GTS-WB-B112-L

GTS-WB-B112-R

32mm Ball

GTS-WB-32B-L

GTS-WB-32B-R

(Left Hand)

(Right Hand)

Material: Steel

Model Number	Weight
GTS-100-85-80LH-A GTS-100-85-80RH-A	656g [1.45 lb]

GTS-100 32mm Ball 100mm Shovel

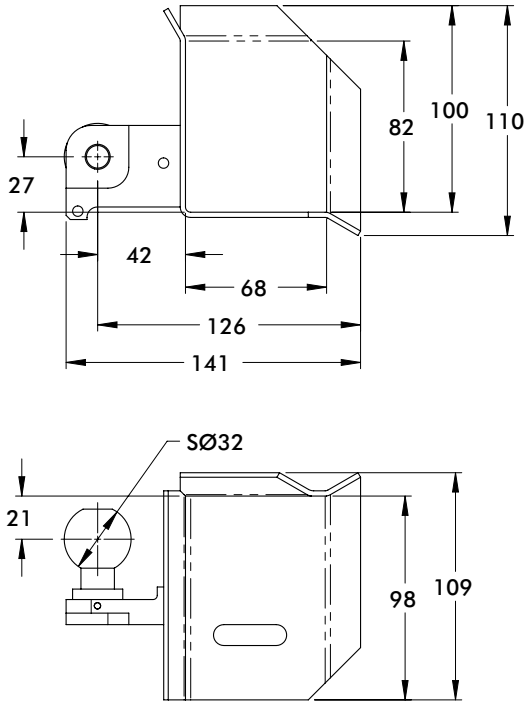

(Left Hand)

(Right Hand)

Material: Steel

Model Number	Weight
GTS-100-85-100LH-A GTS-100-85-100RH-A	730g [1.61 lb]

PA, ARV SERIES

Accelerate® Tooling Collection | Technical Specifications | Dimensions

AB Block Style Proximity Switch Mounts

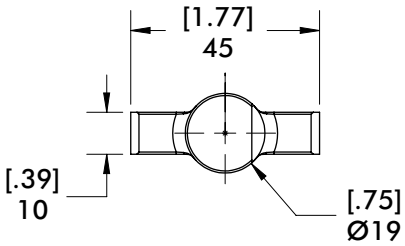

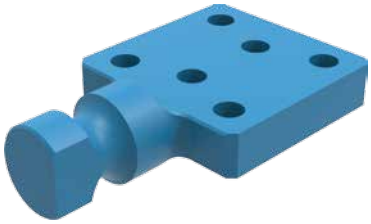

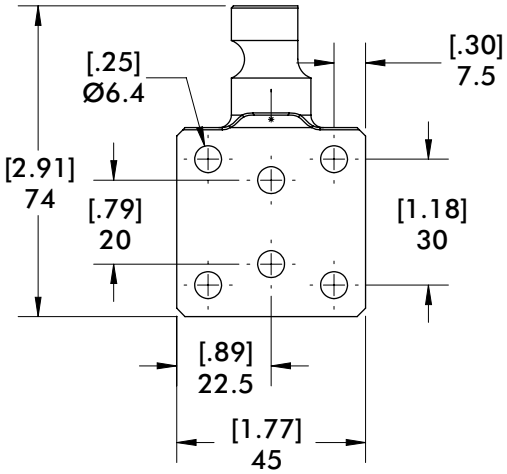

Material: Nylon

Model Number	Weight
CPI-AB-750-EF-BP	31.2g [1.1oz]

(2) screws & (2) locking flange nuts included

SAP Barrel Style Proximity Switch Mounts

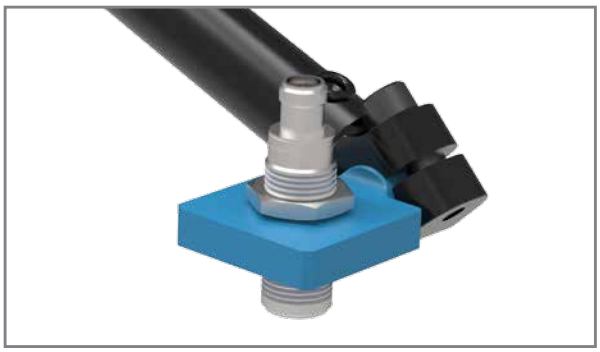

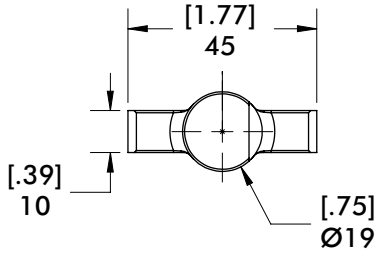

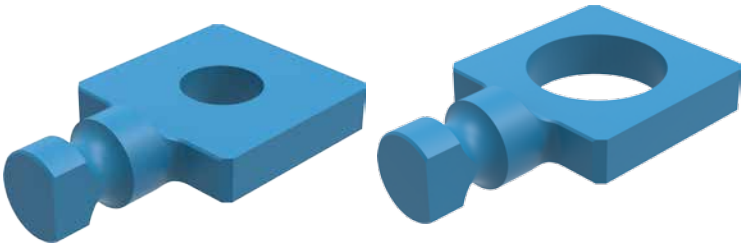

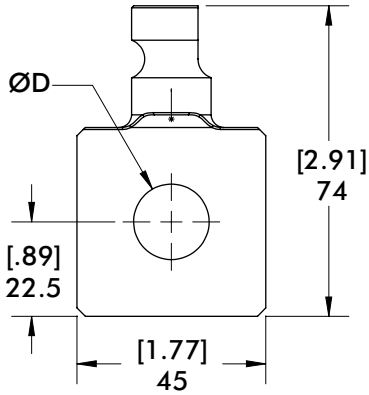

Material: Nylon

Model Number	(Ø)"D"	Weight
CPI-SAP-18-BP	[0.71] 18	28.3g [1.0oz]
CPI-SAP-30-BP	[1.18] 30	22.7g [0.8oz]

Dimensions and technical information are subject to change without notice

Notes